ETA-Danmark A/S
Göteborg Plads 1
DK-2150 Nordhavn
Tel. +45 72 24 59 00
Fax +45 72 24 59 04
Internet www.etadanmark.dk

Authorised and notified according to Article 29 of the Regulation (EU) No 305/2011 of the European Parliament and of the Council of 9 March 2011

MEMBER OF EOTA

European Technical Assessment ETA-12/0114 of 10/07/2017

I General Part

Technical Assessment Body issuing the ETA and designated according to Article 29 of the Regulation (EU) No 305/2011: ETA-Danmark A/S

Trade name of the construction product:	SPAX self-tapping screws
Product family to which the above construction product belongs:	Screws for use in timber constructions
Manufacturer:	SPAX International GmbH & Co. KG Kölner Strasse 71-77 DE-58256 Ennepetal Tel. +49 23 33 799-0 Fax + 49 23 33 799-199 Internet www.spax.com
Manufacturing plant:	SPAX International GmbH & Co. KG Kölner Strasse 71-77 DE-58256 Ennepetal
This European Technical Assessment contains:	99 pages including 5 annexes which form an integral part of the document
This European Technical Assessment is issued in accordance with Regulation (EU) No 305/2011, on the basis of:	European Assessment document (EAD) no. EAD 130118-00-0603 “Screws for timber constructions”
This version replaces:	The previous ETA with the same number issued on 2013-06-26 and expiry on 2017-07-17

Translations of this European Technical Assessment in other languages shall fully correspond to the original issued document and should be identified as such.

Communication of this European Technical Assessment, including transmission by electronic means, shall be in full (excepted the confidential Annex(es) referred to above). However, partial reproduction may be made, with the written consent of the issuing Technical Assessment Body. Any partial reproduction has to be identified as such.

II SPECIFIC PART OF THE EUROPEAN TECHNICAL ASSESSMENT

1 Technical description of product and intended use

Technical description of the product
SPAX screws are self-tapping screws to be used in timber structures. They shall be threaded over a part or over the full length. SPAX threaded rods shall be threaded over the full length. The screws shall be produced from carbon steel wire for nominal diameters of 2,5 mm to 12,0 mm and from stainless steel wire for nominal diameters of 3,0 mm to 12,0 mm. SPAX threaded rods shall be produced from carbon steel wire or from stainless steel wire for a nominal diameter of 16,0 mm. Where corrosion protection is required, the material or coating shall be declared in accordance with the relevant specification given in Annex A of EN 14592.

Geometry and Material
The nominal diameter (outer thread diameter), d, of SPAX screws shall not be less than 2,5 mm and shall not be greater than 12,0 mm. The nominal diameter of SPAX threaded rods is 16 mm. The overall length of the screws, ℓ, shall not be less than 20 mm and shall not be greater than 1000 mm. The overall length of the threaded rods, ℓ, shall not be greater than 2200 mm. Other dimensions are given in Annex A.

The ratio of inner thread diameter to outer thread diameter d_i/d ranges from 0,58 to 0,68.

The screws are threaded over a minimum length ℓ_g of 4·d (i.e. $\ell_g \geq 4 \cdot d$).

The lead p (distance between two adjacent thread flanks) ranges from 0,49·d to 0,61·d.

No breaking shall be observed at a bend angle, α, of less than $(45/d^{0,7} + 20)$ degrees.

2 Specification of the intended use in accordance with the applicable EAD

The screws are used for connections in load bearing The screws and threaded rods are used for connections in load bearing timber structures between members of solid timber (softwood), glued laminated timber (softwood), cross-laminated timber, and laminated veneer lumber (softwood), similar glued members, wood-based panels or steel. The screws are also used for connections in load bearing members of solid timber (hardwood), glued laminated timber (hardwood) or laminated veneer lumber (hardwood). SPAX screws with a thread over the full length and SPAX threaded rods are also used as tensile or compressive reinforcement perpendicular to the grain or as shear reinforcement in softwood members.

Furthermore, SPAX screws with diameters between 6 mm and 12 mm may also be used for the fixing of thermal insulation material on rafters.

Steel plates and wood-based panels except solid wood panels, laminated veneer lumber and cross laminated timber shall only be located on the side of the screw head. The following wood-based panels may be used:

- Plywood according to EN 636 or European Technical Assessment or national provisions that apply at the installation site
- Particleboard according to EN 312 or European Technical Assessment or national provisions that apply at the installation site
- Oriented Strand Board according to EN 300 or European Technical Assessment or national provisions that apply at the installation site
- Fibreboard according to EN 622-2 and 622-3 or European Technical Assessment (minimum density 650 kg/m³) or national provisions that apply at the installation site
- Cement bonded particleboard according to EN 634 or European Technical Assessment or national provisions that apply at the installation site
- Solid wood panels according to EN 13353 or European Technical Assessment or national provisions that apply at the installation site
- Cross laminated timber according to European Technical Assessment
- Laminated Veneer Lumber according to EN 14374 or European Technical Assessment
- Engineered wood products according to European Technical Assessment

The screws or threaded rods are intended to be used in timber connections for which requirements for mechanical resistance and stability and safety in use in the the sense of the Basic Works Requirements 1 and 4 of Regulation 305/2011 (EU) shall be fulfilled.

The design of the connections shall be based on the characteristic load-carrying capacities of the screws. The design capacities shall be derived from the characteristic capacities in accordance with Eurocode 5 or an appropriate national code.

The screws are intended for use for connections subject to static or quasi static loading.

The zinc-coated screws and threaded rods are for use in timber structures subject to the dry, internal conditions defined by the service classes 1 and 2 of EN 1995-1-

1:2008 (Eurocode 5). The screws and threaded rods made of stainless steel meet the requirements of Eurocode 5 (EN 1995-1-1:2008) for use in structures subject to the wet conditions defined as service class 3.

The provisions made in this European Technical Assessment are based on an assumed intended working life of the screws of 50 years.

The indications given on the working life cannot be interpreted as a guarantee given by the producer or Assessment Body, but are to be regarded only as a means for choosing the right products in relation to the expected economically reasonable working life of the works.

3 Performance of the product and references to the methods used for its assessment

Characteristic	Assessment of characteristic	
3.1 Mechanical resistance and stability*) (BWR1)		
Tensile strength	Characteristic value $f_{tens,k}$:	
Screws made of carbon steel	d = 2,5 mm:	1,8 kN
	d = 3,0 mm:	2,6 kN
	d = 3,5 mm:	3,8 kN
	d = 4,0 mm:	5,0 kN
	d = 4,5 mm or 4,6 mm:	6,4 kN
	d = 5,0 mm:	7,9 kN
	d = 5,6 mm:	9,9 kN
	d = 6,0 mm:	11 kN
	d = 7,0 mm:	13 kN
	d = 8,0 mm:	17 kN
	d = 10,0 mm:	28 kN
	d = 12,0 mm:	38 kN
Threaded rods made of carbon steel or stainless steel	d = 16,0 mm:	63 kN
Screws made of stainless steel	d = 3,0 mm:	2,1 kN
	d = 3,5 mm:	2,9 kN
	d = 4,0 mm:	3,8 kN
	d = 4,5 mm or 4,6 mm:	4,2 kN
	d = 5,0 mm or 5,2 mm:	4,9 kN
	d = 5,6 mm:	6,2 kN
	d = 6,0 mm:	7,1 kN
	d = 7,0 mm:	10 kN
	d = 8,0 mm:	13 kN
	d = 10,0 mm:	20 kN
	d = 12,0 mm:	28 kN
Insertion moment	Ratio of the characteristic torsional strength to the mean insertion moment: $f_{tor,k} / R_{tor,mean} \geq 1,5$	
Torsional strength	Characteristic value $f_{tor,k}$:	
Screws made of carbon steel	d = 2,5 mm:	0,65 Nm
	d = 3,0 mm:	1,3 Nm
	d = 3,5 mm:	2,0 Nm
	d = 4,0 mm:	3,0 Nm
	d = 4,5 mm or 4,6 mm:	4,0 Nm
	d = 5,0 mm:	6,0 Nm
	d = 5,6 mm:	8,0 Nm
	d = 6,0 mm:	10,5 Nm
	d = 7,0 mm:	14,2 Nm
	d = 8,0 mm:	21 Nm
	d = 10,0 mm:	40 Nm
	d = 12,0 mm:	70 Nm
Screws made of stainless steel	d = 3,0 mm:	1,0 Nm
	d = 3,5 mm:	1,7 Nm
	d = 4,0 mm:	2,4 Nm
	d = 4,5 mm or 4,6 mm:	3,2 Nm
	d = 5,0 mm or 5,2 mm:	4,6 Nm
	d = 5,6 mm:	5,6 Nm
	d = 6,0 mm:	7,0 Nm
	d = 7,0 mm:	8,7 Nm
	d = 8,0 mm:	17 Nm
	d = 10 mm:	28 Nm
	d = 12 mm:	54 Nm

Characteristic		Assessment of characteristic
3.2	**Safety in case of fire (BWR2)**	
	Reaction to fire	The screws are made from steel classified as performance class A1 of the characteristic reaction to fire, in accordance with the provisions of Commission Delegated Regulation 2016/364 and EC decision 96/603/EC, amended by EC Decision 2000/605/EC.
3.3	**Hygiene, health and the environment (BWR3)**	
	Influence on air quality	The product does not contain/release dangerous substances specified in TR 034, dated October 2015 *
3.4	**Safety in use (BWR4)**	See aspects covered by BWR1
3.7	**Sustainable use of natural resources (BWR7)**	No Performance Assessed
3.8	**General aspects related to the performance of the product**	The screws have been assessed as having satisfactory durability and serviceability when used in timber structures using the timber species described in Eurocode 5 and subject to the conditions defined by service classes 1, 2 and 3
	Identification	See Annex A

*) See additional information in section 3.9 – 3.12.

**) In addition to the specific clauses relating to dangerous substances contained in this European Technical Assessment, there may be other requirements applicable to the products falling within its scope (e.g. transposed European legislation and national laws, regulations and administrative provisions). In order to meet the provisions of the Construction Products Regulation, these requirements need also to be complied with, when and where they apply.

3.9 Mechanical resistance and stability

The load-carrying capacities for SPAX screws are applicable to the wood-based materials mentioned in paragraph 1 even though the term timber has been used in the following.

The characteristic lateral load-carrying capacities and the characteristic axial withdrawal capacities of SPAX screws or threaded rods should be used for designs in accordance with Eurocode 5 or an appropriate national code.

Point side penetration length must be $\ell_{ef} \geq 4 \cdot d$, where d is the outer thread diameter of the screw or threaded rod. For the fixing of thermal insulation material on top of rafters, point side penetration must be at least 40 mm, $\ell_{ef} \geq 40$ mm.

European Technical Assessments for structural members or wood-based panels must be considered where applicable.

Reductions in the cross-sectional area caused by SPAX screws or threaded rods with a diameter of 10 mm or more shall be taken into account in the member strength verification both, in the tensile and compressive area of members.

For screws in pre-drilled holes, the drill hole diameter should be considered in the member strength verification, for screws driven without pre-drilling, the inner thread diameter.

Lateral load-carrying capacity

The characteristic lateral load-carrying capacity of SPAX screws or threaded rods shall be calculated according to EN 1995-1-1 (Eurocode 5) using the outer thread diameter d as the nominal diameter of the screw. The contribution from the rope effect may be considered.

The characteristic yield moment shall be calculated from:

SPAX screws for 2,5 mm $\leq$ d $\leq$ 12,0 mm made of carbon steel:

$M_{y,k} = 0{,}15 \cdot 600 \cdot d^{2,6}$

[Nmm]

SPAX threaded rods:

$M_{y,k} = 140000$ [Nmm]

SPAX screws for 3,0 mm $\leq$ d $\leq$ 12,0 mm made of stainless steel:

$M_{y,k} = 0{,}15 \cdot 400 \cdot d^{2,6}$ [Nmm]

where

d outer thread diameter [mm]

The embedding strength for screws in non-pre-drilled holes arranged at an angle between screw axis and grain direction, $0° \leq \alpha \leq 90°$ is:

$$f_{h,k} = \frac{0{,}082 \cdot \rho_k \cdot d^{-0,3}}{2{,}5 \cdot \cos^2 \alpha + \sin^2 \alpha} \quad [N/mm^2]$$

for screws in pre-drilled holes:

$$f_{h,k} = \frac{0{,}082 \cdot \rho_k \cdot (1 - 0{,}01 \cdot d)}{2{,}5 \cdot \cos^2 \alpha + \sin^2 \alpha} \quad [N/mm^2]$$

for threaded rods in pre-drilled holes:

$$f_{h,k} = \frac{0{,}082 \cdot \rho_k \cdot (1 - 0{,}01 \cdot d)}{\left(2{,}5 \cdot \cos^2 \alpha + \sin^2 \alpha\right) \cdot \left(k_{90} \cdot \sin^2 \varepsilon + \cos^2 \varepsilon\right)}$$

[N/mm²]

Where

ρ_k characteristic timber density [kg/m³];

d outer thread diameter [mm];

α angle between screw axis and grain direction;

ε angle between force and grain direction;

k_{90} according to equation (8.33) in EN 1995-1-1.

The embedding strength for screws arranged parallel to the plane of cross laminated timber, independent of the angle between screw axis and grain direction, $0° \leq \alpha \leq 90°$, shall be calculated from:

$$f_{h,k} = 20 \cdot d^{-0,5}$$

[N/mm²]

unless otherwise specified in the technical specification (ETA or hEN) for the cross laminated timber.

Where

d outer thread diameter [mm]

The embedding strength for screws or threaded rods in the plane surface of cross laminated timber should be assumed as for solid timber based on the characteristic density of the outer layer. If relevant, the angle between force and grain direction of the outer layer should be taken into account.

The direction of the lateral force shall be perpendicular to the screw axis and parallel to the plane surface of the cross laminated timber.

For laterally loaded screws, the rules for multiple fastener connections in EN 1995-1-1, 8.3.1.1 (8) should be applied.

Axial withdrawal capacity

The characteristic axial withdrawal capacity of SPAX screws or threaded rods at an angle of $15° \leq \alpha \leq 90°$ to the grain in solid timber (softwood and hardwood with a maximum characteristic density of 730 kg/m³), glued laminated timber and cross-laminated timber members or at an angle of $30° \leq \alpha \leq 90°$ to the grain in laminated veneer lumber members (softwood and hardwood with a maximum characteristic density of 750 kg/m³) shall be calculated according to EN 1995-1-1:2008 from:

$$F_{ax,\alpha,Rk} = \frac{n_{ef} \cdot f_{ax,k} \cdot d \cdot \ell_{ef}}{1,2 \cdot \cos^2 \alpha + \sin^2 \alpha} \cdot \left(\frac{\rho_k}{350}\right)^{0,8} \quad [N]$$

Where

$F_{ax,\alpha,RK}$	characteristic withdrawal capacity of the screw at an angle α to the grain [N]
n_{ef}	effective number of screws according to EN 1995-1-1:2008
$f_{ax,k}$	Characteristic withdrawal parameter 2,5 mm ≤ d < 6,0 mm: $f_{ax,k}$ = 14,0 N/mm² 6,0 mm ≤ d ≤ 8,0 mm: $f_{ax,k}$ = 12,0 N/mm² d = 10,0 mm: $f_{ax,k}$ = 11,5 N/mm² d = 12,0 mm: $f_{ax,k}$ = 11,0 N/mm² d = 16,0 mm: $f_{ax,k}$ = 10,0 N/mm²
d	outer thread diameter [mm]
ℓ_{ef}	Penetration length of the threaded part according to EN 1995-1-1 [mm]; for the thread under the head including the head length
α	Angle between grain and screw axis ($\alpha \geq 15°$)
ρ_k	Characteristic density [kg/m³]

For screws penetrating more than one layer of cross laminated timber, the different layers may be taken into account proportionally.

The axial withdrawal capacity is limited by the head pull-through capacity and the tensile or compressive capacity of the screw or threaded rod.

For SPAX screws or threaded rods, the withdrawal capacity of the thread in the member with the head may be taken into account instead of the head pull-through capacity.

For axially loaded screws in tension, where the external force is parallel to the screw axes, the rules in EN 1995-1-1, 8.7.2 (8) should be applied.

For inclined screws in timber-to-timber or steel-to-timber shear connections, where the screws are arranged under an angle $30° \leq \alpha \leq 60°$ between the shear plane and the screw axis, the effective number of screws n_{ef} should be determined as follows:

For one row of n screws parallel to the load, the load-carrying capacity should be calculated using the effective number of fasteners n_{ef}, where

$$n_{ef} = \max\left\{n^{0,9}\ ;\ 0,9 \cdot n\right\}$$

and n is the number of inclined screws in a row. If crossed pairs of screws are used in timber-to-timber connections, n is the number of crossed pairs of screws in a row.

Note: For screws as compression reinforcement or inclined screws as fasteners in mechanically jointed beams or columns or for the fixing of thermal insulation material, $n_{ef} = n$.

Head pull-through capacity

The characteristic head pull-through capacity of SPAX screws or threaded rods shall be calculated according to EN 1995-1-1:2008 from:

$$F_{ax,\alpha,Rk} = \max\left\{\frac{f_{ax,k} \cdot d \cdot \ell_{ef}}{1,2 \cdot \cos^2 \alpha + \sin^2 \alpha}; k_t \cdot f_{head,k} \cdot d_h^2\right\} \cdot n_{ef} \cdot \left(\frac{\rho_k}{350}\right)^{0,8} \quad [N]$$

where:

$F_{ax,\alpha,RK}$	Characteristic head pull-through capacity of the connection at an angle $\alpha \geq 30°$ to the grain [N]
n_{ef}	Effective number of screws according to EN 1995-1-1:2008 For inclined screws: $n_{ef} = \max\left\{n^{0,9}\ ;\ 0,9 \cdot n\right\}$ (see axial withdrawal capacity)
k_t	Factor taking into account the head side member thickness t_h $k_t = 1$ for $t_h/d_h < 3$ $k_t = 1,3$ for $t_h/d_h \geq 3$
$f_{head,k}$	Characteristic head pull-through parameter [N/mm²]
d_h	Diameter of the screw head or the washer [mm]. Outer diameter of heads or washers d_h > 32 mm shall only be considered with a nominal diameter of 32 mm.
ρ_k	Characteristic density [kg/m³], for wood-based panels ρ_k = 380 kg/m³

Characteristic head pull-through parameter for SPAX screws with countersunk or hexagon head without flange in connections with timber and in connections with wood-based panels with thicknesses above 20 mm:
$d_h \leq 16$ mm: $f_{head,k} = 27,0 - d_h$ [N/mm²]
16 mm<d_h≤32 mm: $f_{head,k} = 11,0–0,2\cdot(d_h – 16)$ [N/mm²]

Characteristic head pull-through parameter for SPAX screws with washer head, pan head, hexagon head with flange, countersunk head with washer or with second thread under the head in connections with timber and in connections with wood-based panels with thicknesses above 20 mm:

$d_h \leq 16$ mm: $f_{head,k} = 29{,}0 - d_h$ [N/mm²]
16 mm < $d_h \leq 22$ mm: $f_{head,k} = 13{,}0$ [N/mm²]
22 mm < $d_h \leq 32$ mm: $f_{head,k} = 16{,}0 - 0{,}5 \cdot (d_h - 16)$ [N/mm²]

Where
d_h head or washer diameter [mm]

Characteristic head pull-through parameter for screws in connections with wood-based panels with thicknesses between 12 mm and 20 mm:
$f_{head,k} = 8$ N/mm²

Screws in connections with wood-based panels with a thickness below 12 mm (minimum thickness of the wood based panels of 1,2·d with d as outer thread diameter):
$f_{head,k} = 8$ N/mm²
limited to $F_{ax,Rk} = 400$ N

For partially threaded screws with smooth shank under the head, the head or washer diameter shall be equal or greater than 1,8 · ds, where ds is the smooth shank or the wire diameter. Otherwise the characteristic head pull-through capacity $F_{ax,\alpha,Rk} = 0$ for screws with a smooth shank under the head.

The minimum thickness of wood-based panels according to the clause 2.1 must be observed.

In steel-to-timber connections the head pull-through capacity is not governing.

Tensile capacity
The characteristic tensile capacity $f_{tens,k}$ of SPAX screws made of carbon steel or threaded rods made of carbon steel or stainless steel is:

d = 2,5 mm:	1,8 kN
d = 3,0 mm:	2,6 kN
d = 3,5 mm:	3,8 kN
d = 4,0 mm:	5,0 kN
d = 4,5 mm or 4,6 mm:	6,4 kN
d = 5,0 mm:	7,9 kN
d = 5,6 mm:	9,9 kN
d = 6,0 mm:	11 kN
d = 7,0 mm:	13 kN
d = 8,0 mm:	17 kN
d = 10,0 mm:	28 kN
d = 12,0 mm:	38 kN
Threaded rods d = 16 mm:	63 kN

The characteristic tensile capacity $f_{tens,k}$ of SPAX screws made of stainless steel is:

d = 3,0 mm:	2,1 kN
d = 3,5 mm:	2,9 kN
d = 4,0 mm:	3,8 kN
d = 4,5 mm or 4,6 mm:	4,2 kN
d = 5,0 mm or 5,2 mm:	4,9 kN
d = 5,6 mm:	6,2 kN
d = 6,0 mm:	7,1 kN
d = 7,0 mm:	10 kN
d = 8,0 mm:	13 kN
d = 10,0 mm:	20 kN
d = 12,0 mm:	28 kN

The tear-off capacity of the screw head is greater than the tensile capacity of the screw.

Compressive capacity
The design compressive capacity $F_{ax,Rd}$ of SPAX screws or threaded rods with full thread along the length embedded in timber shall be calculated from:

$$F_{ax,Rd} = \min \left\{ \frac{f_{ax,d} \cdot d \cdot \ell_{ef}}{1{,}2 \cdot \cos^2 \alpha + \sin^2 \alpha} \cdot \left(\frac{\rho_k}{350} \right)^{0{,}8} ; \frac{\kappa_c \cdot N_{pl,k}}{\gamma_{M1}} \right\} \quad [N]$$

where

$$\kappa_c = \begin{cases} 1 & \text{for } \bar{\lambda}_k \leq 0{,}2 \\ \dfrac{1}{k + \sqrt{k^2 - \bar{\lambda}_k^2}} & \text{for } \bar{\lambda}_k > 0{,}2 \end{cases}$$

$$k = 0{,}5 \cdot \left[1 + 0{,}49 \cdot (\bar{\lambda}_k - 0{,}2) + \bar{\lambda}_k^2 \right]$$

The relative slenderness ratio shall be calculated from:

$$\bar{\lambda}_k = \sqrt{\frac{N_{pl,k}}{N_{ki,k}}}$$

Where

$$N_{pl,k} = \pi \cdot \frac{d_1^2}{4} \cdot f_{y,k} \quad [N]$$

is the characteristic value for the axial capacity in case of plastic analysis referred to the inner thread cross section

Characteristic yield strength:
$f_{y,k} = 1000$ [N/mm²]
for SPAX screws made of carbon steel

$f_{y,k}$ = 500 [N/mm²]
for SPAX threaded rods and SPAX screws made of stainless steel

Characteristic ideal elastic buckling load:

$$N_{ki,k} = \sqrt{c_h \cdot E_S \cdot I_S} \quad [N]$$

Elastic foundation of the screw:

$$c_h = (0{,}19 + 0{,}012 \cdot d) \cdot \rho_k \cdot \left(\frac{\alpha}{180°} + 0{,}5\right)$$

[N/mm²]
for screws in cross-laminated timber, the most unfavourable combination of α and ρ_k governs;

Modulus of elasticity:
E_s = 210000 [N/mm²]

ρ_k = characteristic density [kg/m³]

Second moment of area:

$$I_S = \frac{\pi}{64} \cdot d_1^4 \quad [mm^4]$$

d_1 = inner thread diameter [mm]

Note: When determining design values of the compressive capacity it should be considered that $f_{ax,d}$ is to be calculated using k_{mod} and γ_M for timber according to EN 1995 while $N_{pl,d}$ is calculated using $\gamma_{M,1}$ for steel buckling according to EN 1993.

Combined laterally and axially loaded screws or threaded rods

For connections subjected to a combination of axial and lateral load, the following expression should be satisfied:

$$\left(\frac{F_{ax,Ed}}{F_{ax,Rd}}\right)^2 + \left(\frac{F_{la,Ed}}{F_{la,Rd}}\right)^2 \leq 1$$

where
$F_{ax,Ed}$ axial design load of the screw or threaded rod
$F_{la,Ed}$ lateral design load of the screw or threaded rod
$F_{ax,Rd}$ design load-carrying capacity of an axially loaded screw or threaded rod
$F_{la,Rd}$ design load-carrying capacity of a laterally loaded screw or threaded rod

Slip modulus

The axial slip modulus K_{ser} of a screw for the serviceability limit state should be taken independent of angle α to the grain as:

$$C = K_{ser} = 25 \cdot d \cdot \ell_{ef} \quad [N/mm]$$

Where
d outer thread diameter [mm]
ℓ_{ef} penetration length in the structural member [mm]

Compression reinforcement
See annex C.

Tensile reinforcement
See annex D.

Shear reinforcement
See annex E.

Thermal insulation material on top of rafters
See annex F.

3.10 Related aspects of serviceability

3.10.1 Corrosion protection in service class 1, 2 and 3.
The SPAX screws and threaded rods are produced from carbon wire. They are brass-plated, nickel-plated bronze finished or electro-galvanised and e.g. yellow or blue chromated with thicknesses of the zinc coating from 4 – 16 µm or have a zinc flake coating with thicknesses from 10 – 20 µm. Steel no. 1.4016, 1.4062, 1.4401, 1.4567, 1.4578, 1.4529 and 1.4539 is used for screws made from stainless steel.

3.11 General aspects related to the intended use of the product

The screws or threaded rods are manufactured in accordance with the provisions of the European Technical Assessment using the automated manufacturing process as identified during the inspection of the plant by the assessment body issuing the ETA and the approved body and laid down in the technical documentation.

The installation shall be carried out in accordance with Eurocode 5 or an appropriate national code unless otherwise is defined in the following. Instructions from SPAX International GmbH & Co. KG should be considered for installation.

The screws or threaded rods are used for connections in load bearing members of solid timber (softwood), glued laminated timber (softwood), cross-laminated timber (minimum diameter d = 6,0 mm), and laminated veneer lumber (minimum diameter d = 8 mm and maximum diameter d = 12 mm for hardwood LVL), similar glued members, wood-based panels or steel members. The screws are also used for connections in load bearing members of solid timber (hardwood) or glued laminated timber (hardwood).

The screws or threaded rods may be used for connections in load bearing timber structures with structural members according to an associated European Technical Assessment, if according to the associated European

Technical Assessment of the structural member a connection in load bearing timber structures with screws according to a European Technical Assessment is allowed.

SPAX fully threaded screws or threaded rods are also used as tensile or compressive reinforcement perpendicular to the grain or as shear reinforcement in softwood members.

Furthermore, the screws with diameters between 6 mm and 12 mm may also be used for the fixing of thermal insulation material on top of rafters.

A minimum of two screws or threaded rods should be used for connections in load bearing timber structures. This does not apply for reinforcements or other situations specified in National Annexes to EN 1995-1-1.

The minimum penetration depth in structural members made of solid, glued or cross-laminated timber is 4·d.

Wood-based panels and steel plates should only be arranged on the side of the screw head. The minimum thickness of wood-based panels should be 1,2·d. Furthermore, the minimum thickness for following wood-based panels should be:

- Plywood, Fibreboards: 6 mm
- Particleboards, OSB, Cement Particleboards: 8 mm
- Solid wood panels: 12 mm

For structural members according to European Technical Assessments the terms of the European Technical Assessments must be considered.

If screws with an outer thread diameter d ≥ 8 mm are used in load bearing timber structures, the structural solid or glued laminated timber, laminated veneer lumber and similar glued members must be from spruce, pine or fir. This does not apply for screws or threaded rods in pre-drilled holes.

The screws shall be driven into softwood without pre-drilling or after pre-drilling. The screws shall be driven into hardwood with a maximum characteristic density of 750 kg/m³ and the threaded rods into softwood after pre-drilling. The drill hole diameters are:

Outer thread diameter	Drill hole diameter	
	Softwood	Hardwood
4,0	2,5	3,0
4,5	3,0	3,0
4,6	3,0	3,0
5,0	3,0	3,5
5,2	3,0	3,5
5,6	3,0	4,0
6,0	4,0	4,0
7,0	4,0	5,0
8,0	5,0	6,0
10,0	6,0	7,0
12,0	7,0	8,0
16,0	13,0	-

The hole diameter in steel members must be predrilled with a suitable diameter.

Only the equipment prescribed by SPAX GmbH & Co. KG shall be used for driving the screws.

In connections with screws with countersunk head according to Annex A the head must be flush with the surface of the connected structural member. A deeper countersink is not allowed.

Unless otherwise specified, minimum thickness for non-predrilled structural members is t = 24 mm for screws with outer thread diameter d < 8 mm, t = 30 mm for screws with outer thread diameter d = 8 mm, t = 40 mm for screws with outer thread diameter d = 10 mm and t = 80 mm for screws with outer thread diameter d = 12 mm.

Minimum distances from loaded or unloaded ends must be 15·d for screws in non-predrilled holes with outer thread diameter d ≥ 8 mm and timber thickness t < 5·d.

Minimum distances from the unloaded edge perpendicular to the grain may be reduced to 3·d also for timber thickness t < 5·d, if the spacing parallel to the grain and the end distance is at least 25·d.

For Douglas fir members minimum spacing and distances parallel to the grain shall be increased by 50%.

For structural timber members, minimum spacing and distances for screws in predrilled holes are given in EN 1995-1-1:2008 (Eurocode 5) clause 8.3.1.2 and table 8.2 as for nails in predrilled holes. These minimum spacing and distances also apply for SPAX screws with CUT or 4CUT drill tip in non-predrilled holes. Here, the outer thread diameter d must be considered. For SPAX screws with CUT or 4CUT drill tip in non-predrilled holes the following conditions shall be fulfilled:

- $a_1 \geq 5 \cdot d$
- $a_{3,c} \geq 12 \cdot d$
- $a_{3,t} \geq 12 \cdot d$
- minimum cross-section ≥ 40 d²
- screws with CUT drill tip:
  $t_{min} = \max\{5 \cdot d\ ;\ 20\ mm\}$ for $d \leq 6$ mm,
  $t_{min} = 7 \cdot d$ for $d \geq 8$ mm

- screws with 4CUT drill tip:
  $t_{min} = \max\{6 \cdot d\ ;\ 20\ mm\}$ for $d \leq 6$ mm,
  $t_{min} = 7 \cdot d$ for $d \geq 8$ mm

For SPAX screws not fulfilling the above conditions or for screws in laminated veneer lumber, minimum spacing and distances are given in EN 1995-1-1:2008 clause 8.3.1.2 and Table 8.2 as for nails in non-predrilled holes.

Alternatively, minimum distances and spacing for exclusively axially loaded SPAX screws with CUT or 4CUT drill tip or with $d \leq 8$ mm in non-predrilled holes in members of solid timber, glued laminated timber or similar glued products with a minimum thickness $t = 12 \cdot d$ may be taken as:

Spacing a_1 parallel to the grain $a_1 = 5 \cdot d$
Spacing a_2 perpendicular to the grain $a_2 = 5 \cdot d$
Distance $a_{3,c}$ from centre of the screw-part in timber to the end grain $a_{3,c} = 5 \cdot d$
Distance $a_{4,c}$ from centre of the screw-part in timber to the edge $a_{4,c} = 4 \cdot d$
Distance $a_{4,c}$ from centre of the screw-part in timber to the edge for screws with CUT or 4CUT drill tip only $a_{4,c} = 3 \cdot d$

Spacing a_2 perpendicular to the grain may be reduced from $5 \cdot d$ to $2{,}5 \cdot d$, if the condition $a_1 \cdot a_2 \geq 25 \cdot d^2$ is fulfilled.

Alternatively, minimum distances and spacing for exclusively axially loaded SPAX screws in laminated veneer members (softwood) with a minimum thickness $t = 6 \cdot d$ may be taken as:

Spacing a_1 parallel to the grain $a_1 = 5 \cdot d$
Spacing a_2 perpendicular to the grain $a_2 = 5 \cdot d$
Distance $a_{3,c}$ from centre of the screw-part in timber to the end grain $a_{3,c} = 5 \cdot d$
Distance $a_{4,c}$ from centre of the screw-part in timber to the edge $a_{4,c} = 3 \cdot d$

Spacing a_2 perpendicular to the grain may be reduced from $5 \cdot d$ to $2{,}5 \cdot d$, if the condition $a_1 \cdot a_2 \geq 25 \cdot d^2$ is fulfilled.

Unless specified otherwise in the technical specification (ETA or hEN) of cross laminated timber, minimum distances and spacing for screws in the plane surface of cross laminated timber members with a minimum thickness $t_{CLT} = 10 \cdot d$ may be taken as (see Annex B):

Spacing a_1 parallel to the grain $a_1 = 4 \cdot d$
Spacing a_2 perpendicular to the grain $a_2 = 2{,}5 \cdot d$
Distance $a_{3,c}$ from centre of the screw-part in timber to the unloaded end grain $a_{3,c} = 6 \cdot d$
Distance $a_{3,t}$ from centre of the screw-part in timber to the loaded end grain $a_{3,t} = 6 \cdot d$
Distance $a_{4,c}$ from centre of the screw-part in timber to the unloaded edge $a_{4,c} = 2{,}5 \cdot d$
Distance $a_{4,t}$ from centre of the screw-part in timber to the loaded edge $a_{4,t} = 6 \cdot d$

Unless specified otherwise in the technical specification (ETA or hEN) of cross laminated timber, minimum distances and spacing for screws in the edge surface of cross laminated timber members with a minimum thickness $t_{CLT} = 10 \cdot d$ and a minimum penetration depth perpendicular to the edge surface of $10 \cdot d$ may be taken as (see Annex B):

Spacing a_1 parallel to the CLT plane $a_1 = 10 \cdot d$
Spacing a_2 perpendicular to the CLT plane $a_2 = 4 \cdot d$
Distance $a_{3,c}$ from centre of the screw-part in timber to the unloaded end $a_{3,c} = 7 \cdot d$
Distance $a_{3,t}$ from centre of the screw-part in timber to the loaded end $a_{3,t} = 12 \cdot d$
Distance $a_{4,c}$ from centre of the screw-part in timber to the unloaded edge $a_{4,c} = 3 \cdot d$
Distance $a_{4,t}$ from centre of the screw-part in timber to the loaded edge $a_{4,t} = 6 \cdot d$

For SPAX screws or threaded rods in predrilled holes the above requirements for minimum thickness do not apply.

For crossed screw couples the minimum spacing between the crossing screws is given in Annex B.

Minimum distances and spacings for SPAX screws in mechanically jointed beams are given in Annex B.

4 Attestation and verification of constancy of performance (AVCP)

4.1 AVCP system

According to the decision 97/176/EC of the European Commission1, as amended, the system(s) of assessment and verification of constancy of performance (see Annex V to Regulation (EU) No 305/2011) is 3.

5 Technical details necessary for the implementation of the AVCP system, as foreseen in the applicable EAD

Technical details necessary for the implementation of the AVCP system are laid down in the control plan deposited at ETA-Danmark prior to CE marking.

Issued in Copenhagen on 2017-07-10 by

Thomas Bruun
Managing Director, ETA-Danmark

Annex A

Drawings, designation and material specification of SPAX screws

SPAX®-S

Flat countersunk head

Self-tapping screw with full and partial thread

Material: cold rolled wire according to SPAX - Factory Standard

Screws of high carbon steel

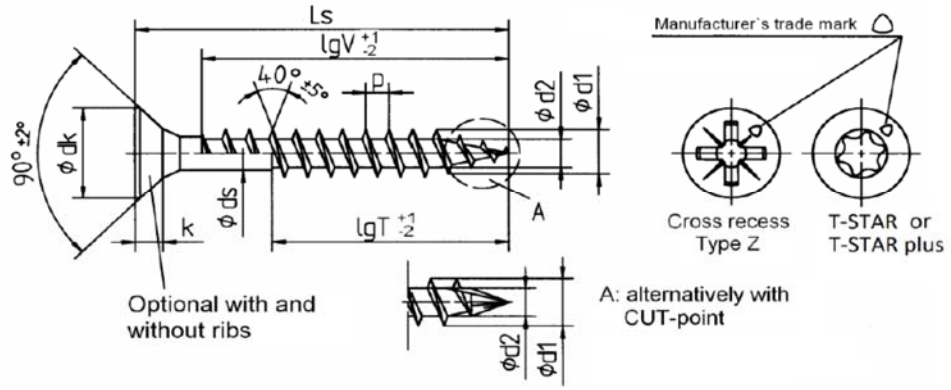

Nominal diameter		2,5	3,0	3,5	4,0	4,5	5,0	6,0
d1	thread size	2,5	3,1	3,5	4,0	4,5	5,0	6,0
	permissible tolerance	±0,2	+0,2/-0,3	±0,2				
dk	head diameter	5,0	5,9	6,9	7,9	8,8	9,7	11,6
	permissible tolerance	+0,1/-0,3				-0,40		-0,43
d2	core diameter	1,7	1,9	2,2	2,5	2,8	3,2	3,8
	permissible tolerance	-0,30	+0,15/-0,25	-0,30				
ds	shank diameter	1,8	2,15	2,45	2,85	3,20	3,55	4,30
	permissible tolerance	±0,10						
k	head height max.	1,6	1,8	2,1	2,4	2,7	2,9	3,4
p	thread pitch	1,3	1,5	1,8	2,0	2,2	2,5	3,0
	permissible tolerance	±0,1 x p						
T-STAR	size	T8	T10	T15	T20		T25	T30
Cross recess size Type Z		1		2				3

Ls			Standard thread lengths (full thread = lgV / partial thread = lgT)													
Nom.dim.	min	max	lgV	lgT	lgV	lgT	lgV	lgT	lgV	lgT	lgV	lgT	lgV	lgT	lgV	lgT
12	***12,0***	***13,5***	***10,0***													
15	14,0	15,5	12,0		12,5											
16	***16,0***	***17,5***	***14,0***		***14,0***											
20	18,5	20,5	17,0	12,0	17,0		16,0		16,0							
25	***23,5***	***25,5***	***22,0***	***18,0***	***22,0***	***18,0***	***21,0***	***18,0***	***21,0***		***20,0***		***20,0***			
30	28,5	30,5	27,0	18,0	26,0	18,0	25,0	18,0	25,0	18,0	25,0		25,0		24,0	
35	***33,5***	***36,0***		***22,0***	***31,0***	***23,0***	***30,0***	***23,0***	***30,0***	***23,0***	***30,0***	***25,0***	***30,0***	***25,0***	***29,0***	***24,0***
40	38,5	41,0		22,0	36,0	23,0	35,0	23,0	35,0	23,0	34,0	25,0	35,0	27,0	34,0	24,0
45	***43,5***	***46,0***		***28,0***	***36,0***	***28,0***	***40,0***	***30,0***	***40,0***	***30,0***	***39,0***	***30,0***	***39,0***	***30,0***	***38,0***	***29,0***
50	48,5	51,0				28,0	40,0	32,0	45,0	32,0	44,0	32,0	44,0	32,0	43,0	32,0
55	***53,5***	***56,0***				***36,0***		***35,0***	***50,0***	***35,0***	***49,0***	***37,0***	***49,0***	***37,0***	***48,0***	***37,0***
60	58,5	61,0						35,0	50,0	35,0	54,0	37,0	54,0	37,0	53,0	37,0
65	***63,5***	***66,0***						***40,0***		***37,5***	***59,0***	***42,0***	***59,0***	***41,0***	***58,0***	***41,0***
70	68,5	71,0								37,5	59,0	42,0	61,0	41,0	61,0	41,0
75	***73,5***	***76,0***								***37,5***		***42,0***	***61,0***	***41,0***	***61,0***	***41,0***
80	78,5	81,0								37,5		47,0	61,0	46,0	61,0	46,0
90	***88,5***	***91,5***										***47,0***		***61,0***		***61,0***
100	98,5	101,5												61,0		61,0
110	***108,5***	***111,5***												***69,0***		***68,0***
120	118,5	121,5												69,0		68,0
130	***128,0***	***132,0***														***68,0***
140	138,0	142,0														68,0
150	***148,0***	***152,0***														***68,0***
160	158,0	162,0														68,0

Screws of Ø6,0 mm with partial thread additionally in lenght of 180 to 300 mm, in steps of 20 mm, LgT= 68,0 mm

Intermediate lengths on Ls possible

Other thread lengths in the range ≥4xd1 to max. standard length permitted.

SPAX®-S

Flat countersunk head

Self-tapping screw with full and partial thread

Material: cold rolled wire according to SPAX - Factory Standard
Screws of high carbon steel

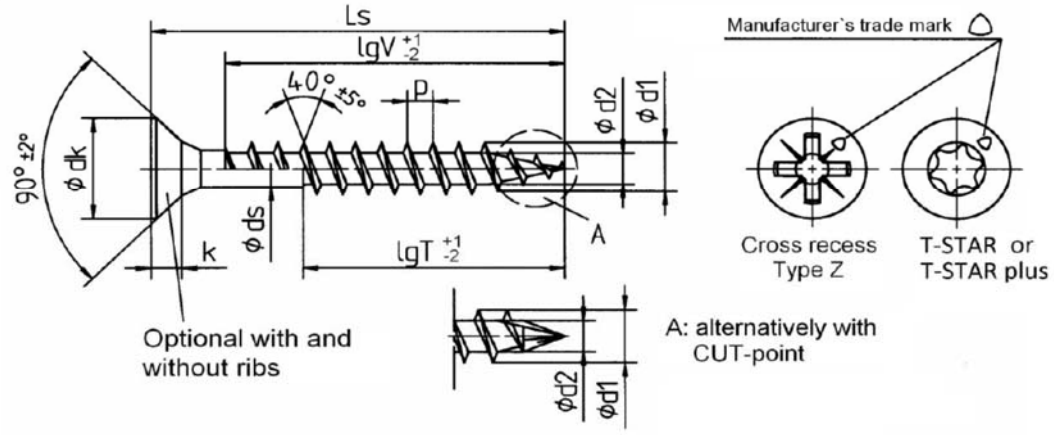

Nominal diameter		**7,0**
d1	thread size	7,0
	permissible tolerance	±0,20
dk	head diameter	13,1
	permissible tolerance	-0,60
d2	core diameter	4,5
	permissible tolerance	-0,30
ds	shank diameter	4,90
	permissible tolerance	±0,10
k	head height max.	3,8
p	thread pitch	3,5
	permissible tolerance	±0,1 x p
T - STAR	size	T30
Cross recess size Type Z		3

Ls			Standard thread lengths (full thread = lgV / partial thread = lgT)	
Nom.dim.	min	max	lgV	lgT
40	38,5	41,0	33,0	
45	***43,5***	***46,0***	***38,0***	
50	48,5	51,0	43,0	33,0
55	***53,5***	***56,0***	***48,0***	***33,0***
60	58,5	61,0	53,0	38,0
65	***63,5***	***66,0***	***58,0***	***38,0***
70	68,5	71,0	61,0	43,0
75	***73,5***	***76,0***	***68,0***	***43,0***
80	78,5	81,0	68,0	48,0
90	***88,5***	***91,5***	***68,0***	***53,0***
100	98,5	101,5	68,0	58,0
110	***108,5***	***111,5***		***68,0***
120	118,5	121,5		68,0
130	***128,0***	***132,0***		***68,0***
140	138,0	142,0		68,0
150	***148,0***	***152,0***		***68,0***
160	158,0	162,0		68,0
180	***178,0***	***182,0***		***68,0***
200	198,0	202,0		68,0
bis				
400	***397,0***	***402,0***		***68,0***

Lenghts over 200 mm to 400 mm in steps of 20 mm

Intermediate lengths on Ls possible

Other thread lengths in the range ≥4xd1 to max. standard length permitted.

Annex A2

SPAX®-S

Washer head

Self-tapping screw with full and partial thread

Material: cold rolled wire according to SPAX - Factory Standard

Screws of high carbon steel

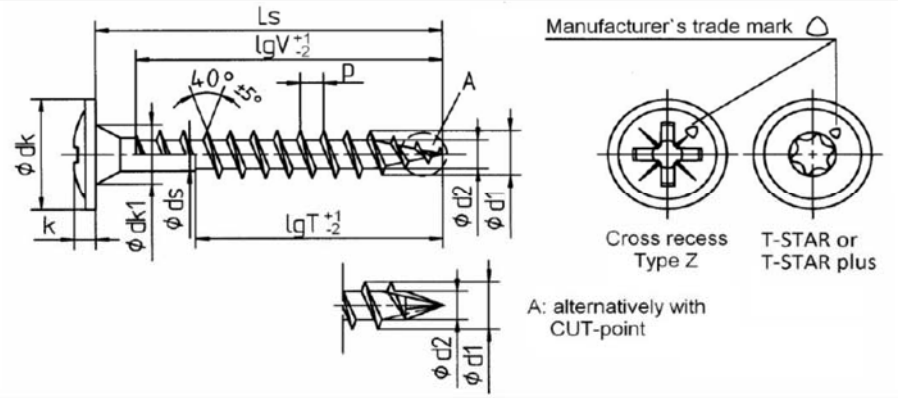

Nominal diameter			3,0	3,5	4,0	4,5	5,0	6,0
d1	thread size		3,1	3,5	4,0	4,5	5,0	6,0
	permissible tolerance		+0,2/-0,3	±0,2				
dk	head diameter		7,8	8,5	9,6	10,5	11,6	13,6
	permissible tolerance		+0,1/-0,3		-0,5	+0,1/-0,5	-0,60	
dk1	contersink diameter		4,9	4,9	5,0	5,4	5,9	6,9
	permissible tolerance		-0,2					
d2	core diameter		1,9	2,2	2,5	2,8	3,2	3,8
	permissible tolerance		+0,15/-0,25	-0,30				
ds	shank diameter		2,15	2,45	2,85	3,20	3,55	4,30
	permissible tolerance		±0,10					
k	head height max.		1,5	1,8	1,9	2,0	2,2	2,4
p	thread pitch		1,5	1,8	2,0	2,2	2,5	3,0
	permissible tolerance		±0,1 x p					
T - STAR	size		T10	T15	T20		T25	T30
Cross recess size Type Z			2					

Ls			Standard thread lengths (full thread = lgV / partial thread = lgT)													
Nom.dim.	min	max	lgV	lgT	lgV	lgT	lgV	lgT	lgV	lgT	lgV	lgT	lgV	lgT	lgV	lgT
15	***14,0***	***15,5***	***13,0***													
16	16,0	17,5	15,0		15,0											
20	***18,5***	***20,5***	***18,0***	***12,5***	***18,0***		***18,0***									
25	23,5	25,5	23,0	18,0	23,0	18,0	23,0	17,0	22,5		22,0					
30	***28,5***	***30,5***	***28,0***	***18,0***	***27,0***	***18,0***	***27,5***	***18,0***	***27,5***		***27,0***		***27,0***			
35	33,5	36,0	33,0	23,0	32,0	23,0	32,5	23,0	32,5	25,0	32,0	25,0	32,0	24,0		
40	***38,5***	***41,0***	***36,0***	***23,0***	***37,0***	***23,0***	***37,5***	***23,0***	***37,0***	***25,0***	***37,0***	***27,0***	***37,0***	***24,0***		
45	43,5	46,0	36,0	28,0	40,0	30,0	42,5	30,0	42,0	30,0	41,0	30,0	41,0	29,0		
50	***48,5***	***51,0***		***28,0***		***32,0***	***47,5***	***32,5***	***47,0***	***32,5***	***46,0***	***32,0***	***46,0***	***32,0***		
55	53,5	56,0		36,0		35,0	50,0	35,0	52,0	37,0	51,0	37,0	51,0	37,0		
60	***58,5***	***61,0***				***35,0***	***50,0***	***35,0***	***57,0***	***37,0***	***56,0***	***37,0***	***56,0***	***37,0***		
65	63,5	66,0				40,0		37,5	59,0	42,0	61,0	41,0	61,0	41,0		
70	***68,5***	***71,0***						***37,5***	***59,0***	***42,0***	***61,0***	***41,0***	***61,0***	***41,0***		
75	73,5	76,0						37,5		42,0	61,0	41,0	61,0	41,0		
80	***78,5***	***81,0***						***37,5***		***47,0***	***61,0***	***46,0***	***61,0***	***46,0***		
90	88,5	91,5								47,0		61,0		61,0		
100	***98,5***	***101,5***										***61,0***		***61,0***		
110	108,5	111,5										69,0		68,0		
120	***118,5***	***121,5***										***69,0***		***68,0***		
130	128,0	132,0												68,0		
140	***138,0***	***142,0***												***68,0***		
150	148,0	152,0												68,0		
160	***158,0***	***162,0***												***68,0***		

Screws of Ø6,0 mm with partial thread additionally in lenght of 180 to 300 mm, in steps of 20 mm, LgT= 68,0 mm

Intermediate lengths on Ls possible

Other thread lengths in the range ≥4xd1 to max. standard length permitted.

Annex A3

	SPAX®-S Washer head	Self-tapping screw with full and partial thread Material: cold rolled wire according to SPAX - Factory Standard Screws of high carbon steel

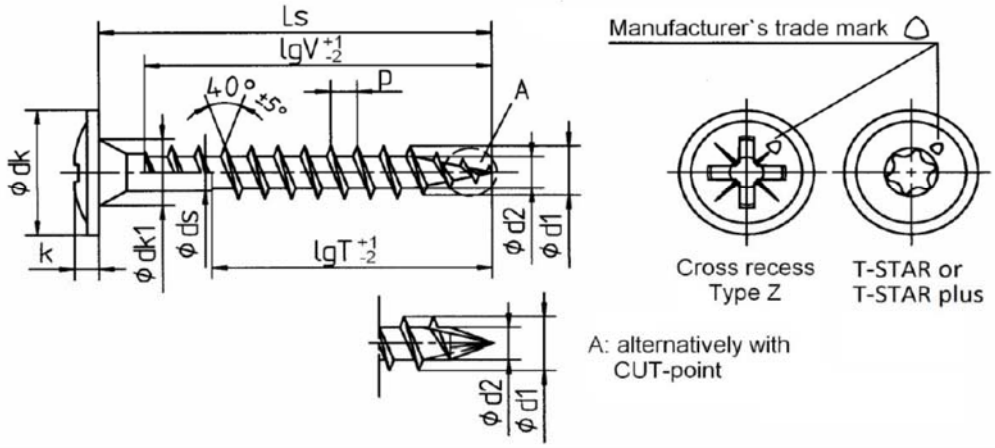

Norminal diameter		**7,0**
d1	thread size	7,0
	permissible tolerance	±0,20
dk	head diameter	18,0
	permissible tolerance	-0,60
dk1	contersink diameter	7,8
	permissible tolerance	-0,30
d2	core diameter	4,5
	permissible tolerance	-0,30
ds	shank diameter	4,90
	permissible tolerance	±0,1
k	head height max.	3,7
p	thread pitch	3,5
	permissible tolerance	±0,1 x p
T - STAR size		T30
Cross recess size Type Z		3

Ls			Standard thread lengths (full thread = lgV / partial thread = lgT)	
Nom.dim.	min	max	lgV	lgT
50	48,5	51,0	46,0	33,0
55	***53,5***	***56,0***	***51,0***	***33,0***
60	58,5	61,0	56,0	38,0
65	***63,5***	***66,0***	***61,0***	***38,0***
70	68,5	71,0	61,0	43,0
75	***73,5***	***76,0***	***68,0***	***43,0***
80	78,5	81,0	68,0	48,0
90	***88,5***	***91,5***	***68,0***	***53,0***
100	98,5	101,5	68,0	58,0
110	***108,5***	***111,5***		***68,0***
120	118,5	121,5		68,0
130	***128,0***	***132,0***		***68,0***
140	138,0	142,0		68,0
150	***148,0***	***152,0***		***68,0***
160	158,0	162,0		68,0
180	***178,0***	***182,0***		***68,0***
200	198,0	202,0		68,0
to				
400	***397,0***	***402,0***		***68,0***

Lenghts over 200 mm to 400 mm in steps of 20 mm

Intermediate lengths on Ls possible

Other thread lengths in the range ≥4xd1 to max. standard length permitted.

SPAX®-S

Raised countersunk head

Self-tapping screw with full and partial thread

Material: cold rolled wire according to SPAX - Factory Standard

Screws of high carbon steel

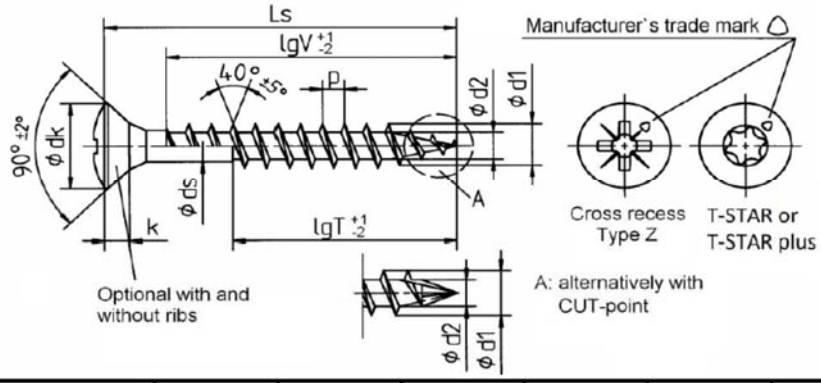

Norminal diameter		2,5	3,0	3,5	4,0	4,5	5,0	6,0
d1	thread size	2,5	3,1	3,5	4,0	4,5	5,0	6,0
	permissible tolerance	±0,2	+0,2/-0,3	±0,2				
dk	head diameter	5,0	5,9	6,9	7,9	8,8	9,7	11,6
	permissible tolerance	+0,1/-0,3				-0,40		-0,43
d2	core diameter	1,7	1,9	2,2	2,5	2,8	3,2	3,8
	permissible tolerance	-0,30	+0,15/-0,25	-0,30				
ds	shank diameter	1,8	2,15	2,45	2,85	3,20	3,55	4,30
	permissible tolerance	±0,10						
k	head height max.	1,6	1,8	2,1	2,4	2,7	2,9	3,4
p	thread pitch	1,3	1,5	1,8	2,0	2,2	2,5	3,0
	permissible tolerance	±0,1 x p						
T - STAR	size	T8	T10	T15	T20		T25	T30
Cross recess size Type Z		1		2				3

Ls			Standard thread lengths (full thread = lgV / partial thread = lgT)													
Nom.dim.	min	max	lgV	lgT	lgV	lgT	lgV	lgT	lgV	lgT	lgV	lgT	lgV	lgT	lgV	lgT
12	***12,0***	***13,5***	***10,0***													
15	14,0	15,5	12,0		12,5											
16	***16,0***	***17,5***	***14,0***		***14,0***											
20	18,5	20,5	17,0	12,0	17,0	12,5	16,0		16,0							
25	***23,5***	***25,5***	***22,0***	***18,0***	***22,0***	***18,0***	***21,0***	***18,0***	***21,0***		***20,0***		***20,0***			
30	28,5	30,5		18,0	26,0	18,0	25,0	18,0	25,0	18,0	25,0		25,0		24,0	
35	***33,5***	***36,0***		***22,0***	***31,0***	***23,0***	***30,0***	***23,0***	***30,0***	***22,5***	***30,0***	***25,0***	***30,0***	***25,0***	***29,0***	
40	38,5	41,0		22,0	36,0	23,0	35,0	23,0	35,0	22,5	34,0	25,0	35,0	27,0	34,0	24,0
45	***43,5***	***46,0***		***28,0***	***36,0***	***28,0***	***40,0***	***30,0***	***40,0***	***30,0***	***39,0***	***30,0***	***39,0***	***30,0***	***38,0***	***29,0***
50	48,5	51,0				28,0	40,0	32,0	45,0	32,0	44,0	32,0	44,0	32,0	43,0	32,0
55	***53,5***	***56,0***				***36,0***		***35,0***	***50,0***	***35,0***	***49,0***	***37,0***	***49,0***	***37,0***	***48,0***	***37,0***
60	58,5	61,0						35,0	50,0	35,0	54,0	37,0	54,0	37,0	53,0	37,0
65	***63,5***	***66,0***						***40,0***		***37,5***	***59,0***	***42,0***	***59,0***	***41,0***	***58,0***	***41,0***
70	68,5	71,0								37,5	59,0	42,0	61,0	41,0	61,0	41,0
75	***73,5***	***76,0***								***37,5***		***42,0***	***61,0***	***41,0***	***61,0***	***41,0***
80	78,5	81,0								37,5		47,0	61,0	46,0	61,0	46,0
90	***88,5***	***91,5***										***47,0***		***61,0***		***61,0***
100	98,5	101,5												61,0		61,0
110	***108,5***	***111,5***												***69,0***		***68,0***
120	118,5	121,5												69,0		68,0
130	***128,0***	***132,0***														***68,0***
140	138,0	142,0														68,0
150	***148,0***	***152,0***														***68,0***
160	158,0	162,0														68,0

Screws of Ø6,0 mm with partial thread additionally in lenght of 180 to 300 mm, in steps of 20 mm, LgT= 68,0 mm

Other thread lengths in the range ≥4xd1 to max. standard length permitted.

Intermediate lengths on Ls possible

SPAX®-S

Raised countersunk head

Self-tapping screw with full and partial thread

Material: cold rolled wire according to SPAX - Factory Standard

Screws of high carbon steel

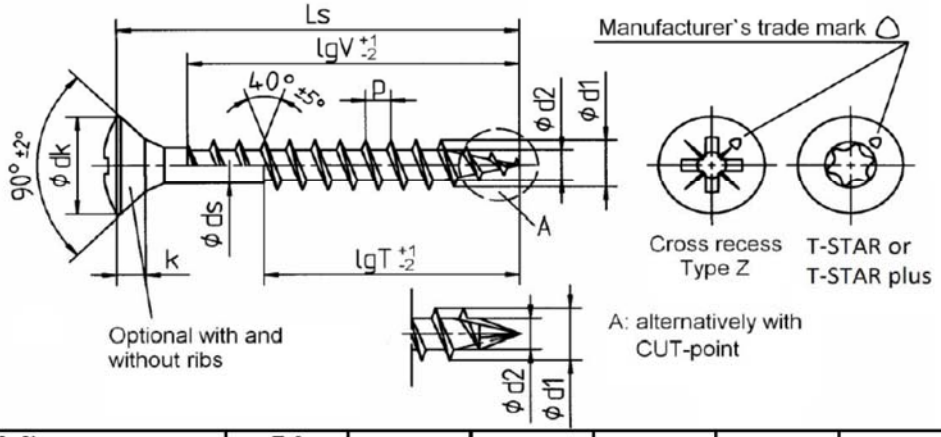

Norminal diameter		**7,0**
d1	thread size	7,0
	permissible tolerance	±0,20
dk	head diameter	13,1
	permissible tolerance	-0,60
d2	core diameter	4,5
	permissible tolerance	-0,30
ds	shank diameter	4,90
	permissible tolerance	±0,10
k	head height max.	3,8
p	thread pitch	3,5
	permissible tolerance	±0,1 x p
T - STAR	size	T30
Cross recess size Type Z		3

Ls			Standard thread lengths (full thread = lgV / partial thread = lgT)	
Nom.dim.	min	max	lgV	lgT
40	38,5	41,0	33,0	
45	***43,5***	***46,0***	***38,0***	
50	48,5	51,0	43,0	33,0
55	***53,5***	***56,0***	***48,0***	***33,0***
60	58,5	61,0	53,0	38,0
65	***63,5***	***66,0***	***58,0***	***38,0***
70	68,5	71,0	61,0	43,0
75	***73,5***	***76,0***	***68,0***	***43,0***
80	78,5	81,0	68,0	48,0
90	***88,5***	***91,5***	***68,0***	***53,0***
100	98,5	101,5	68,0	58,0
110	***108,5***	***111,5***		***68,0***
120	118,5	121,5		68,0
130	***128,0***	***132,0***		***68,0***
140	138,0	142,0		68,0
150	***148,0***	***152,0***		***68,0***
160	158,0	162,0		68,0
180	***178,0***	***182,0***		***68,0***
200	198,0	202,0		68,0
to				
400	***397,0***	***402,0***		***68,0***

Lenghts over 200 mm to 400 mm in steps of 20 mm

Intermediate lengths on Ls possible

Other thread lengths in the range ≥4xd1 to max. standard length permitted.

Annex A6

SPAX®-S

Pan head

Self-tapping screw with full and partial thread

Material: cold rolled wire according to SPAX - Factory Standard

Screws of high carbon steel

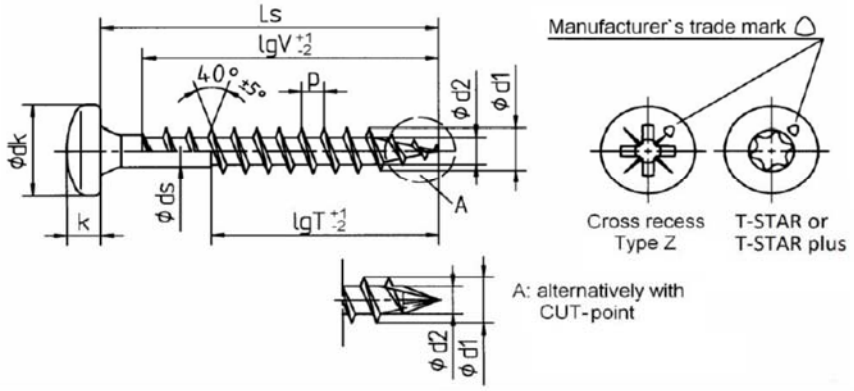

Nominal diameter		2,5	3,0	3,5	4,0	4,5	5,0	6,0
d1	thread size	2,5	3,1	3,5	4,0	4,5	5,0	6,0
	permissible tolerance	±0,2	+0,2/-0,3	±0,2				
dk	head diameter	4,9	5,9	7,0	7,9	9,0	9,9	11,9
	permissible tolerance	+0,1/-0,3		±0,3		-0,50		-0,60
d2	core diameter	1,7	1,9	2,2	2,5	2,8	3,2	3,8
	permissible tolerance	-0,30	+0,15/-0,25	-0,30				
ds	shank diameter	1,8	2,15	2,45	2,85	3,20	3,55	4,30
	permissible tolerance	±0,10						
k	head height max.	2,1	2,3	2,7	2,9	3,1	3,4	4,0
p	thread pitch	1,3	1,5	1,8	2,0	2,2	2,5	3,0
	permissible tolerance	±0,1 x p						
T-STAR	size	T8	T10	T15	T20		T25	T30
Cross recess size Type Z		1		2				3

Ls			Standard thread lengths (full thread = lgV / partial thread = lgT)													
Nom.dim.	min	max	lgV	lgT	lgV	lgT	lgV	lgT	lgV	lgT	lgV	lgT	lgV	lgT	lgV	lgT
12	***12,0***	***13,5***	***12,0***													
15	14,0	15,5	13,0		13,0											
16	***16,0***	***17,5***	***15,0***		***15,0***		***15,0***									
20	18,5	20,5	18,0	12,0	18,0		18,0		18,0							
25	***23,5***	***25,5***	***23***	***18,0***	***23,0***		***23,0***	***18,0***	***23,0***		***22,5***		***22,0***			
30	28,5	30,5	28,0	18,0	28,0	18,0	27,0	18,0	27,5	18,0	27,5		27,0		27,0	
35	***33,5***	***36,0***		***22,0***	***33,0***	***23,0***	***32,0***	***23,0***	***32,5***	***23,0***	***32,5***	***25,0***	***32,0***	***25,0***	***32,0***	***24,0***
40	38,5	41,0		22,0	36,0	23,0	37,0	23,0	37,5	23,0	37,0	25,0	37,0	27,0	37,0	24,0
45	***43,5***	***46,0***		***28,0***	***36,0***	***28,0***		***30,0***	***42,5***	***30,0***	***42,0***	***30,0***	***41,0***	***30,0***	***41,0***	***29,0***
50	48,5	51,0				28,0		32,0	47,5	32,5	47,0	32,5	46,0	32,0	46,0	32,0
55	***53,5***	***56,0***				***36,0***		***35,0***	***50,0***	***35,0***	***52,0***	***37,0***	***51,0***	***37,0***	***51,0***	***37.0***
60	58,5	61,0						35,0	50,0	35,0	57,0	37,0	56,0	37,0	56,0	37.0
65	***63,5***	***66,0***						***40,0***		***37,5***	***59,0***	***42,0***	***61,0***	***41,0***	***60,0***	***41,0***
70	68,5	71,0								37,5	59,0	42,0	61,0	41,0	60,0	41,0
75	***73,5***	***76,0***								***37,5***		***42,0***	***61,0***	***41,0***	***60,0***	***41,0***
80	78,5	81,0								37,5		47,0	61,0	46,0	60,0	46,0
90	***88,5***	***91,5***										***47,0***		***61,0***		***61.0***
100	98,5	101,5												61,0		61.0
110	***108,5***	***111,5***												***69,0***		***68,0***
120	118,5	121,5												69,0		68,0
130	***128,0***	***132,0***														***68,0***
140	138,0	142,0														68,0
150	***148,0***	***152,0***														***68,0***
160	158,0	162,0														68,0

Screws of Ø6,0 mm with partial thread additionally in lenght of 180 to 300 mm, in steps of 20 mm, LgT= 68,0 mm

Intermediate lengths on Ls possible

Other thread lengths in the range ≥4xd1 to max. standard length permitted.

SPAX®-S

Pan head

Self-tapping screw with full and partial thread

Material: cold rolled wire according to SPAX - Factory Standard

Screws of high carbon steel

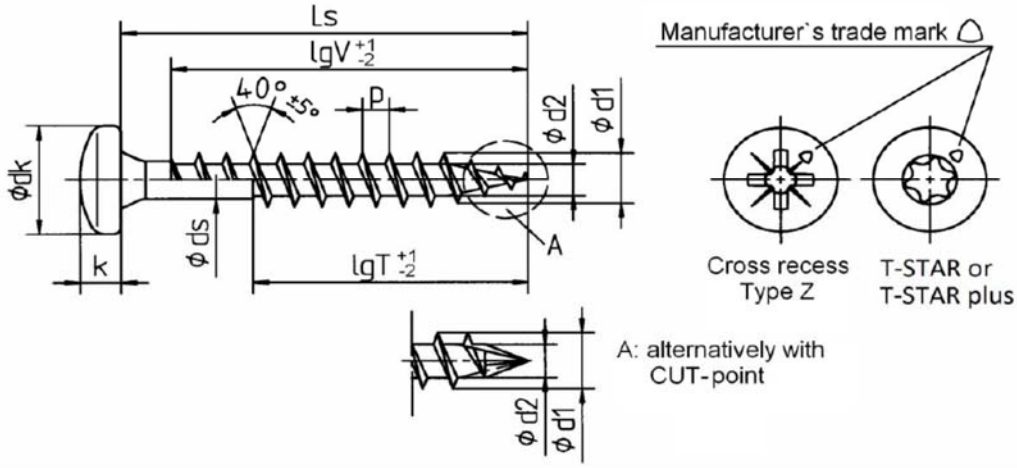

Nominal diameter		**7,0**
d1	thread size	7,0
	permissible tolerance	±0,20
dk	head diameter	13,5
	permissible tolerance	-0,60
d2	core diameter	4,5
	permissible tolerance	-0,30
ds	shank diameter	4,90
	permissible tolerance	±0,10
k	head height max.	5
p	thread pitch	3,5
	permissible tolerance	±0,1x p
T-STAR	size	T30
Cross recess size Type Z		3

Ls			Standard thread lengths (full thread = lgV / partial thread = lgT)	
Nom.dim.	min	max	lgV	lgT
50	48,5	51,0	46,0	33,0
55	***53,5***	***56,0***	***51,0***	***33,0***
60	58,5	61,0	56,0	38,0
65	***63,5***	***66,0***	***61,0***	***38,0***
70	68,5	71,0	61,0	43,0
75	***73,5***	***76,0***	***68,0***	***43,0***
80	78,5	81,0	68,0	48,0
90	***88,5***	***91,5***	***68,0***	***53,0***
100	98,5	101,5	68,0	58,0
110	***108,5***	***111,5***		***68,0***
120	118,5	121,5		68,0
130	***128,0***	***132,0***		***68,0***
140	138,0	142,0		68,0
150	***148,0***	***152,0***		***68,0***
160	158,0	162,0		68,0
180	***178,0***	***182,0***		***68,0***
200	198,0	202,0		68,0
to				
400	***397,0***	***402,0***		***68,0***

Screws of Ø6,0 mm with partial thread additionally in lenght of 180 to 300 mm, in steps of 20 mm, LgT= 68,0 mm

Intermediate lengths on Ls possible

Other thread lengths in the range ≥4xd1 to max. standard length permitted.

SPAX®-S

Countersunk head with cutting ribs

Self-tapping screw with double thread

Material: cold rolled wire according to SPAX - Factory standard
Screws of high carbon steel

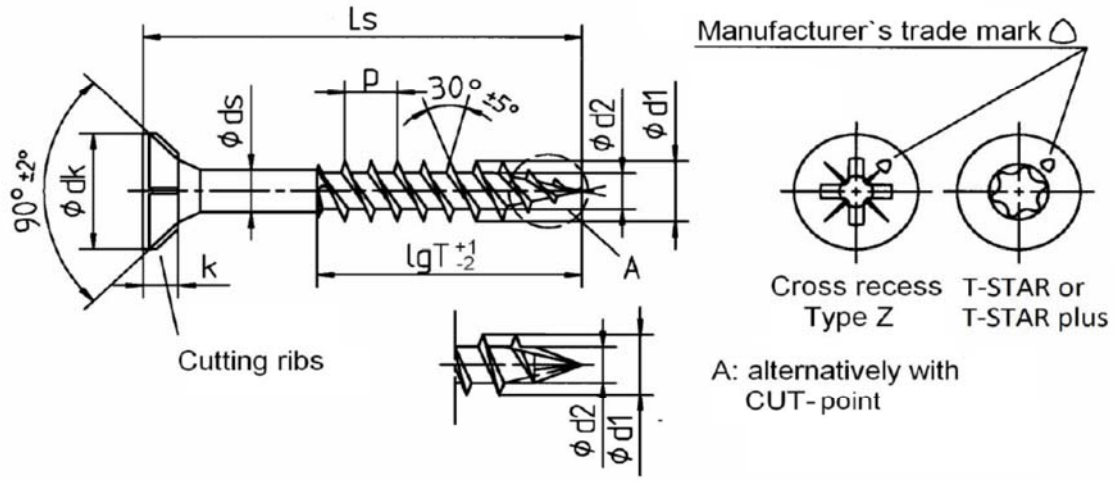

Norminal diameter						**4,0**	**4,5**		
d1	thread size					4,0	4,5		
	permissible tolerance					±0,2			
dk	head diameter					8,0	8,8		
	permissible tolerance					-0,30			
d2	core diameter					2,5	2,8		
	permissible tolerance					-0,30			
ds	shank diameter					2,85	3,20		
	permissible tolerance					±0,10			
k	head height max.					2,4	2,7		
p	thead pitch					3,3	3,5		
	permissible tolerance					±0,1 x p			
T - STAR	size					T20			
Cross recess size Type Z						2			
Ls			Standard thread lenghts (partial thread = lgT)						
Nom.dim.	min	max				lgT	lgT		
35	33,5	36,0				22,5	24,0		
40	***38,5***	***41,0***				***22,5***	***24,0***		
45	43,5	46,0				30,0	29,0		
50	***48,5***	***51,0***				***30,0***	***29,0***		
55	53,5	56,0				35,0	34,0		
60	***58,5***	***61,0***				***35,0***	***34,0***		
65	63,5	66,0				37,5	42,0		
70	***68,5***	***71,0***				***37,5***	***42,0***		
75	73,5	76,0				50,0	49,0		
80	***78,5***	***81,0***					***49,0***		
90	88,5	91,5					49,0		

Intermediate lengths on Ls possible

Other thread lengths in the range ≥4xd1 to max. standard length permitted

Annex A9

SPAX®-S

Countersunk with head hole

Self-tapping screw with full thread

Material: cold rolled wire according to SPAX - Factory Standard
Screws of high carbon steel

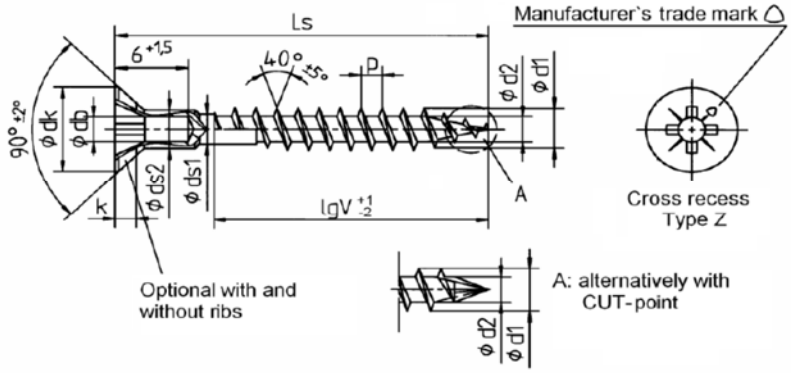

Nominal diameter					**4,0**	**4,5**	**5,0**	**6,0**
d1	thread size				4,0	4,5	5,0	6,0
	permissible tolerance				± 0,2			
dk	head diameter				7,9	8,7	9,6	11,6
	permissible tolerance				+0,1/-0,4			-0,50
db	hole diameter				2,50			
	permissible tolerance				± 0,15			
d2	core diameter				2,5	2,8	3,2	3,8
	permissible tolerance				-0,30			
ds1	shank diameter				2,85	3,20	3,55	4,30
	permissible tolerance				± 0,10			
ds2	shank diameter				3,60	3,80	4,10	ohne
	permissible tolerance				±0,10		±0,2	
k	head height max.				2,4	2,7	2,9	3,4
p	thread pitch				2,0	2,2	2,5	3,0
	permissible tolerance				± 0,1 x p			
Cross recess size Z					2			3
Ls			Standard thread lengths (full thread = lgV)					
Nom.dim.	min	max			lgV	lgV	lgV	lgV
25	23,5	26,0			18,0			
30	***28,5***	***31,0***			***23,0***	***20,0***		
35	33,5	36,0			27,5	25,0		
40	***38,5***	***41,0***			***32,5***	***30,0***	***30,0***	
45	43,5	46,0			37,5	34,0	35,0	
50	***48,5***	***51,0***			***42,5***	***39,0***	***39,0***	***41,0***
55	53,5	56,0			47,5	44,0	44,0	46,0
60	***58,5***	***61,0***			***50,0***	***49,0***	***49,0***	***51,0***
65	63,5	66,0				54,0	54,0	56,0
70	***68,5***	***71,0***				***59,0***	***61,0***	***61,0***
75	73,5	76,0				59,0	61,0	61,0
80	***78,5***	***81,0***				***59,0***	***61,0***	***61,0***
90	88,5	91,5				59,0	61,0	61,0
100	***98,5***	***101,5***					***61,0***	***61,0***
110	108,5	111,5					69,0	68,0
120	***118,5***	***121,5***					***69,0***	***68,0***
130	128,0	132,0						68,0
140	***138,0***	***142,0***						***68,0***
150	148,0	152,0						68,0
160	***158,0***	***162,0***						***68,0***

Screw of Ø 6,0 mm with partial thread additionally in lengths of 180 to 300 mm , in steps of 20 mm, lgV = 68,0 mm

Other thead lengths in the range ≥4xd1 to max. standard length permitted

Intermediate lengths on Ls possible

Annex A10

SPAX®-S

Flat countersunk head

Self-tapping screw with full and partial thread

Material: cold rolled wire according to SPAX - Factory Standard

Stainless steel screws

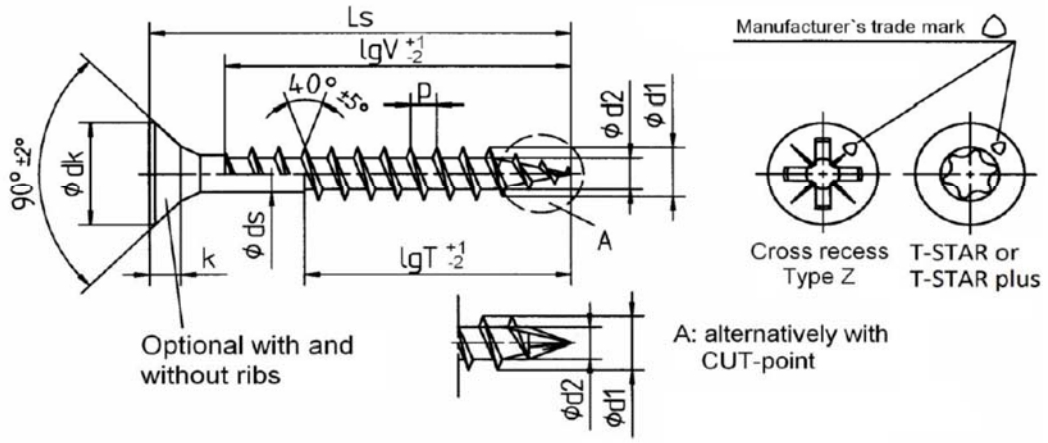

Nominal diameter			3,0	3,5	4,0	4,5	5,0	6,0
d1	thread size		3,0	3,5	4,0	4,5	5,1	6,1
	permissible tolerance		±0,2				±0,25	
dk	head diameter		5,9	6,9	7,9	8,8	9,7	11,6
	permissible tolerance		+0,1/-0,3			-0,40		-0,43
d2	core diameter		2,1	2,4	2,8	3,0	3,4	3,8
	permissible tolerance		-0,30					
ds	shank diameter		2,25	2,60	3,00	3,30	3,75	4,30
	permissible tolerance		±0,10					
k	head height max.		1,8	2,1	2,4	2,7	2,9	3,4
p	thread pitch		1,5	1,8	2,0	2,2	2,5	3,0
	permissible tolerance		±0,1 x p					
T-STAR	size		T10	T15	T20		T25	T30
Cross recess size Type Z			1	2				3

Ls			Standard thread lengths (full thread = lgV / partial thread = lgT)													
Nom.dim.	min	max	lgV	lgT	lgV	lgT	lgV	lgT	lgV	lgT	lgV	lgT	lgV	lgT	lgV	lgT
15	14,0	15,5			12,5											
16	***16,0***	***17,5***			***14,0***											
20	18,5	20,5			17,0		16,0		16,0							
25	***23,5***	***25,5***			***21,0***	***18,0***	***21,0***	***18,0***	***21,0***		***20,0***		***20,0***			
30	28,5	30,5			26,0	18,0	25,0	18,0	25,0	18,0	25,0		25,0		24,0	
35	***33,5***	***36,0***			***31,0***	***23,0***	***30,0***	***23,0***	***30,0***	***23,0***	***30,0***	***25,0***	***30,0***	***25,0***	***29,0***	***24,0***
40	38,5	41,0			36,0	23,0	35,0	23,0	35,0	23,0	34,0	25,0	35,0	27,0	34,0	24,0
45	***43,5***	***46,0***			***36,0***	***28,0***	***40,0***	***30,0***	***40,0***	***30,0***	***39,0***	***30,0***	***39,0***	***30,0***	***38,0***	***29,0***
50	48,5	51,0				28,0	40,0	32,0	45,0	32,0	44,0	32,0	44,0	32,0	43,0	32,0
55	***53,5***	***56,0***				***36,0***		***35,0***	***50,0***	***35,0***	***49,0***	***37,0***	***49,0***	***37,0***	***48,0***	***37,0***
60	58,5	61,0						35,0	50,0	35,0	54,0	37,0	54,0	37,0	53,0	37,0
65	***63,5***	***66,0***						***40,0***		***37,5***	***59,0***	***42,0***	***59,0***	***41,0***	***58,0***	***41,0***
70	68,5	71,0								37,5	59,0	42,0	61,0	41,0	61,0	41,0
75	***73,5***	***76,0***								***37,5***		***42,0***	***61,0***	***41,0***	***61,0***	***41,0***
80	78,5	81,0								37,5		47,0	61,0	46,0	61,0	46,0
90	***88,5***	***91,5***										***47,0***		***61,0***		***61,0***
100	98,5	101,5												61,0		61,0
110	***108,5***	***111,5***												***69,0***		***68,0***
120	118,5	121,5												69,0		68,0
130	***128,0***	***132,0***														***68,0***
140	138,0	142,0														68,0
150	***148,0***	***152,0***														***68,0***
160	158,0	162,0														68,0

Intermediate lengths on Ls possible

Other thread lengths in the range ≥4xd1 to max. standard length permitted.

Annex A11

SPAX®-S

Flat countersunk head

Self-tapping screw with full and partial thread

Material: cold rolled wire according to SPAX - Factory Standard
Stainless steel screws

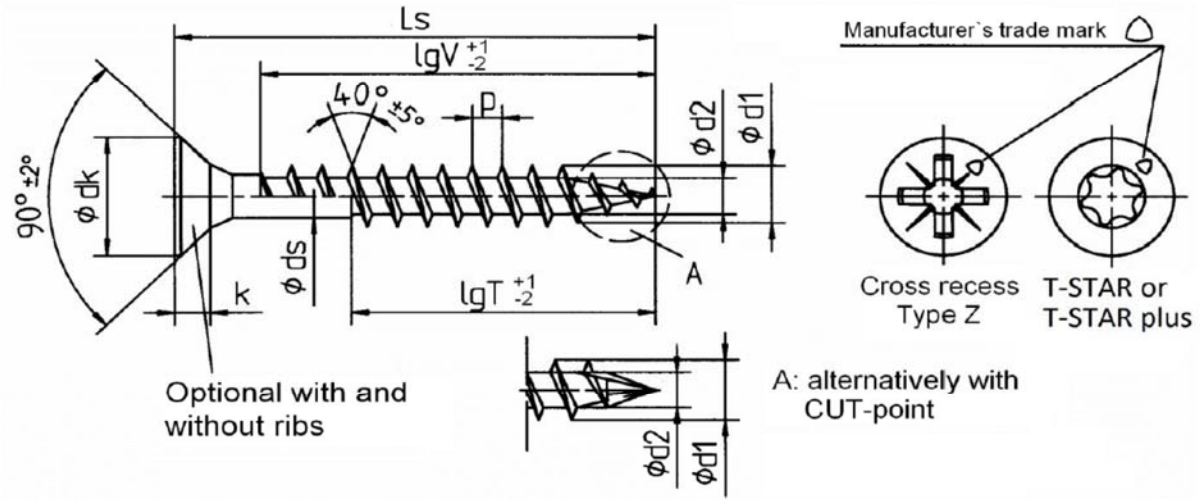

Nominal diameter		**7,0**
d1	thread size	7,1
	permissible tolerance	±0,25
dk	head diameter	13,1
	permissible tolerance	-0,60
d2	core diameter	4,5
	permissible tolerance	-0,30
ds	shank diameter	4,90
	permissible tolerance	±0,10
k	head height max.	3,8
p	thread pitch	3,5
	permissible tolerance	±0,1 x p
T - STAR	size	T30
Cross recess size Type Z		3

Ls			Standard thread lengths (full thread = lgV / partial thread = lgT)	
Nom.dim.	min	max	lgV	lgT
40	38,5	41,0	33,0	
45	***43,5***	***46,0***	***38,0***	
50	48,5	51,0	43,0	33,0
55	***53,5***	***56,0***	***48,0***	***33,0***
60	58,5	61,0	53,0	38,0
65	***63,5***	***66,0***	***58,0***	***38,0***
70	68,5	71,0	61,0	43,0
75	***73,5***	***76,0***	***68,0***	***43,0***
80	78,5	81,0	68,0	48,0
90	***88,5***	***91,5***	***68,0***	***53,0***
100	98,5	101,5	68,0	58,0
110	***108,5***	***111,5***		***68,0***
120	118,5	121,5		68,0

Intermediate lengths on Ls possible

Other thread lengths in the range ≥4xd1 to max. standard length permitted.

Annex A12

SPAX®-S
Washer head

Self-tapping screw with full and partial thread

Material: cold rolled wire according to SPAX - Factory Standard
Stainless steel screws

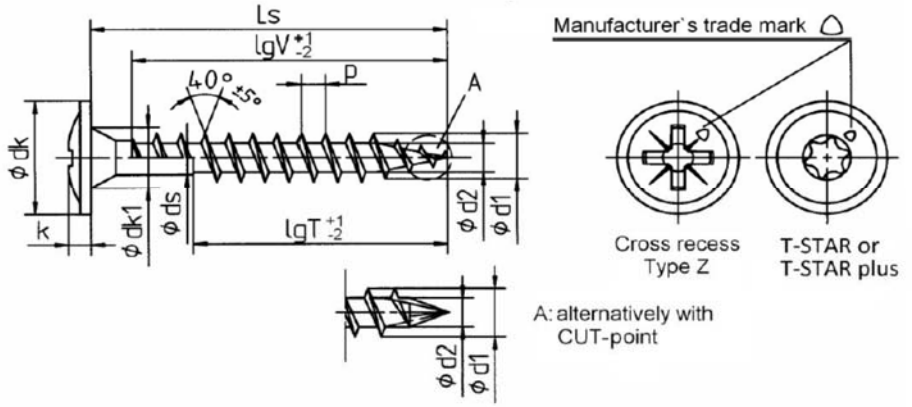

Nominal diameter			**3,0**	**3,5**	**4,0**	**4,5**	**5,0**	**6,0**
d1	thread size		3,0	3,5	4,0	4,5	5,1	6,1
	permissible tolerance		±0,20				±0,25	
dk	head diameter		7,9	8,6	9,6	10,6	11,6	13,6
	permissible tolerance		-0,40	-0,50		-0,60		
dk1	contersink diameter		4,9	4,9	5,0	5,4	5,9	6,9
	permissible tolerance		+0,20					
d2	core diameter		2,1	2,4	2,8	3,0	3,4	3,8
	permissible tolerance		-0,30					
ds	shank diameter		2,25	2,60	3,00	3,30	3,75	4,30
	permissible tolerance		±0,10					
k	head height max.		1,5	1,8	1,9	2,0	2,2	2,4
p	thread pitch		1,5	1,8	2,0	2,2	2,5	3,0
	permissible tolerance		±0,1 x p					
T - STAR	size		T10	T15	T20		T25	T30
Cross recess size Type Z			2					

Ls			Standard thread lengths (full thread = lgV / partial thread = lgT)											
Nom.dim.	min	max	lgV	lgT	lgV	lgT	lgV	lgT	lgV	lgT	lgV	lgT	lgV	lgT
12	12,0	13,5	13,0											
15	***16,0***	***17,5***	***14,0***											
16	16,0	17,5	15,0		15,0									
20	***18,5***	***20,5***	***18,0***	***12,5***	***18,0***		***18,0***							
25	23,5	25,5	23,0	18,0	23,0	18,0	23,0		22,5		22,0			
30	***28,5***	***30,5***	***28,0***	***18,0***	***27,0***	***18,0***	***27,5***	***18,0***	***27,5***		***27,0***		***27,0***	
35	33,5	36,0	33,0	23,0	32,0	23,0	32,5	23,0	32,5	25,0	32,0	25,0	32,0	24,0
40	***38,5***	***41,0***	***36,0***	***23,0***	***37,0***	***23,0***	***37,5***	***23,0***	***37,0***	***25,0***	***37,0***	***27,0***	***37,0***	***24,0***
45	43,5	46,0	36,0	28,0		30,0	42,5	30,0	42,0	30,0	41,0	30,0	41,0	29,0
50	***48,5***	***51,0***		***28,0***		***32,0***	***47,5***	***32,5***	***47,0***	***32,5***	***46,0***	***32,0***	***46,0***	***32,0***
55	53,5	56,0		36,0		35,0	50,0	35,0	52,0	37,0	51,0	37,0	51,0	37,0
60	***58,5***	***61,0***				***35,0***	***50,0***	***35,0***	***57,0***	***37,0***	***56,0***	***37,0***	***56,0***	***37,0***
65	63,5	66,0				40,0		37,5	59,0	42,0	61,0	41,0	61,0	41,0
70	***68,5***	***71,0***						***37,5***	***59,0***	***42,0***	***61,0***	***41,0***	***61,0***	***41,0***
75	73,5	76,0						37,5		42,0	61,0	41,0	61,0	41,0
80	***78,5***	***81,0***						***37,5***		***47,0***	***61,0***	***46,0***	***61,0***	***46,0***
90	88,5	91,5								47,0		61,0		61,0
100	***98,5***	***101,5***										***61,0***		***61,0***
110	108,5	111,5										69,0		68,0
120	***118,5***	***121,5***										***69,0***		***68,0***
130	128,5	131,5												68,0
140	***138,5***	***141,5***												***68,0***
150	148,5	151,5												68,0
160	***158,5***	***161,5***												***68,0***

Intermediate lengths on Ls possible

Other thread lengths in the range ≥4xd1 to max. standard length permitted.

Annex A13

	SPAX®-S Washer head	Self-tapping screw with full and partial thread Material: cold rolled wire according to SPAX - Factory Standard Stainless steel screw

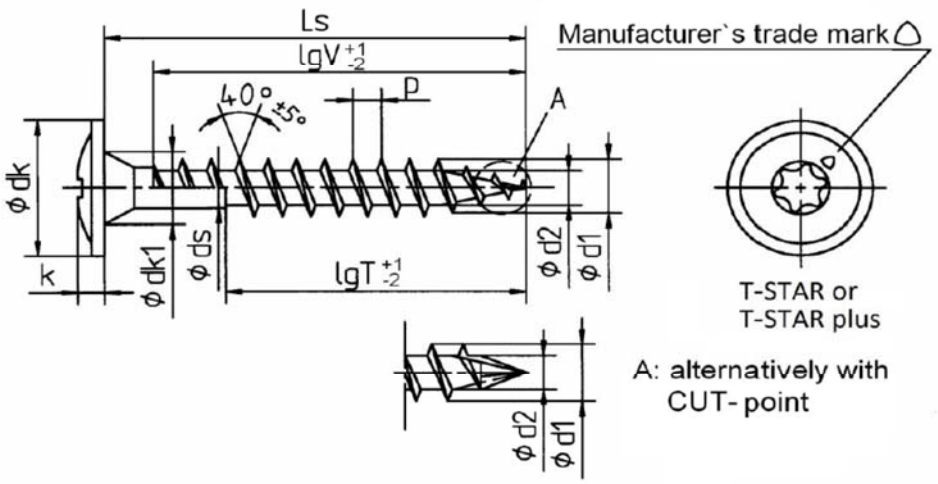

Norminal diameter		**7,0**
d1	thread size	7,1
	permissible tolerance	±0,25
dk	head diameter	18,0
	permissible tolerance	-0,60
dk1	contersink diameter	7,8
	permissible tolerance	-0,30
d2	core diameter	4,5
	permissible tolerance	-0,30
ds	shank diameter	4,90
	permissible tolerance	±0,10
k	head height max.	3,7
p	thread pitch	3,5
	permissible tolerance	±0,1 x p
T - STAR	size	T30

Ls			Standard thread lengths (full thread = lgV / partial thread = lgT)	
Nom.dim.	min	max	lgV	lgT
50	48,5	51,0	46,0	33,0
55	***53,5***	***56,0***	***51,0***	***33,0***
60	58,5	61,0	56,0	38,0
65	***63,5***	***66,0***	***61,0***	***38,0***
70	68,5	71,0	61,0	43,0
75	***73,5***	***76,0***	***68,0***	***43,0***
80	78,5	81,0	68,0	48,0
90	***88,5***	***91,5***	***68,0***	***53,0***
100	98,5	101,5	68,0	58,0
110	***108,5***	***111,5***		***68,0***
120	118,5	121,5		68,0

Intermediate lengths on Ls possible

Other thread lengths in the range ≥4xd1 to max. standard length permitted.

SPAX®-S

Raised countersunk head

Self-tapping screw with full and partial thread

Material: cold rolled wire according to SPAX - Factory Standard

Stainless steel screws

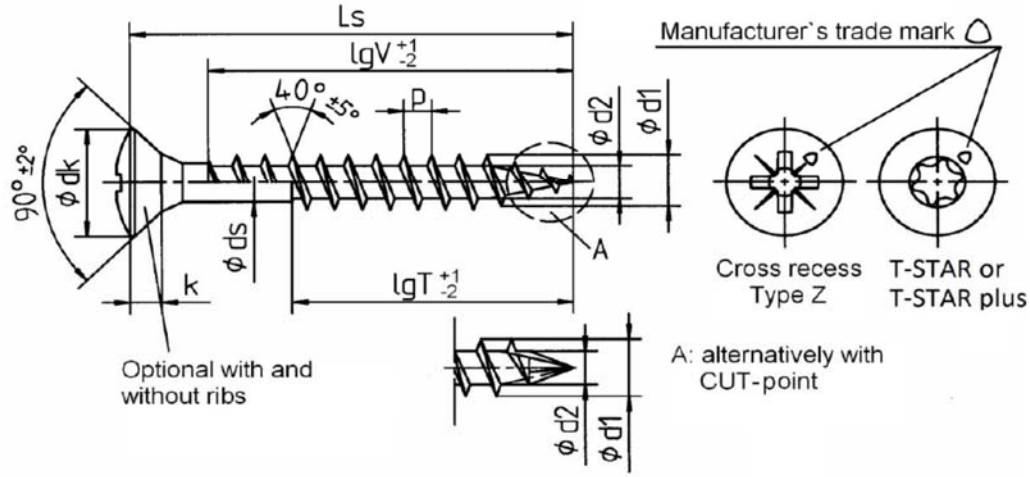

Norminal diameter			3,0	3,5	4,0	4,5	5,0	6,0
d1	thread size		3,0	3,5	4,0	4,5	5,1	6,1
	permissible tolerance		±0,20				±0,25	
dk	head diameter		5,9	6,9	7,9	8,8	9,7	11,6
	permissible tolerance		+0,1/-0,3			-0,40		-0,43
d2	core diameter		2,1	2,4	2,8	3,0	3,4	3,8
	permissible tolerance		-0,30					
ds	shank diameter		2,25	2,60	3,00	3,30	3,75	4,30
	permissible tolerance		±0,10					
k	head hight max.		1,8	2,1	2,4	2,7	2,9	3,4
p	thread pitch		1,5	1,8	2,0	2,2	2,5	3,0
	permissible tolerance		±0,1 x p					
T - STAR	size		T10	T15	T20		T25	T30
Cross recess size Type Z			1	2				3

Ls			Standard thread lengths (full thread = lgV / partial thread = lgT)											
Nom.dim.	min	max	lgV	lgT	lgV	lgT	lgV	lgT	lgV	lgT	lgV	lgT	lgV	lgT
15	***14,0***	***15,5***	***12,5***											
16	16,0	17,5	14,0											
20	***18,5***	***20,5***	***17,0***	***12,5***	***16,0***		***16,0***							
25	23,5	25,5	22,0	18,0	21,0	18,0	21,0		20,0		20,0			
30	***28,5***	***30,5***	***26,0***	***18,0***	***25,0***	***18,0***	***25,0***	***18,0***	***25,0***		***25,0***		***24,0***	
35	33,5	36,0	31,0	23,0	30,0	23,0	30,0	23,0	30,0	25,0	30,0	25,0	29,0	24,0
40	***38,5***	***41,0***	***36,0***	***23,0***	***35,0***	***23,0***	***35,0***	***23,0***	***34,0***	***25,0***	***35,0***	***27,0***	***34,0***	***24,0***
45	43,5	46,0	36,0	28,0	40,0	30,0	40,0	30,0	39,0	30,0	39,0	30,0	38,0	29,0
50	***48,5***	***51,0***		***28,0***	***40,0***	***32,0***	***45,0***	***32,5***	***44,0***	***32,5***	***44,0***	***32,0***	***43,0***	***32,0***
55	53,5	56,0		36,0		35,0	50,0	35,0	49,0	37,0	49,0	37,0	48,0	37,0
60	***58,5***	***61,0***				***35,0***	***50,0***	***35,0***	***54,0***	***37,0***	***54,0***	***37,0***	***53,0***	***37,0***
65	63,5	66,0				40,0		37,5	59,0	42,0	59,0	41,0	58,0	41,0
70	***68,5***	***71,0***						***37,5***	***59,0***	***42,0***	***61,0***	***41,0***	***61,0***	***41,0***
75	73,5	76,0						37,5		42,0	61,0	41,0	61,0	41,0
80	***78,5***	***81,0***						***37,5***		***47,0***	***61,0***	***46,0***	***61,0***	***46,0***
90	88,5	91,5								47,0		61,0		61,0
100	***98,5***	***101,5***										***61,0***		***61,0***
110	108,5	111,5										69,0		68,0
120	***118,5***	***121,5***										***69,0***		***68,0***
130	128,0	132,0												68,0
140	***138,0***	***142,0***												***68,0***
150	148,0	152,0												68,0
160	***158,0***	***162,0***												***68,0***

Intermediate lengths on Ls possible

Other thread lengths in the range ≥4xd1 to max. standard length permitted.

Annex A15

SPAX®-S
Raised countersunk head

Self-tapping screw with full and partial thread

Material: cold rolled wire according to SPAX - Factory Standard
Stailness steel screw

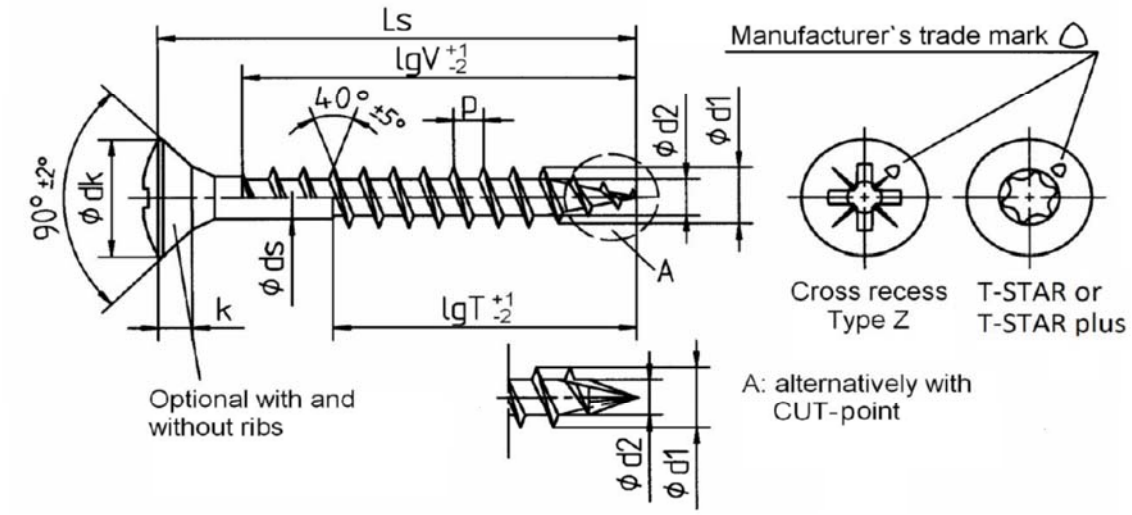

Norminal diameter		**7,0**
d1	thread size	7,1
	permissible tolerance	±0,25
dk	head diameter	13,1
	permissible tolerance	-0,60
d2	core diameter	4,5
	permissible tolerance	-0,30
ds	shank diameter	4,90
	permissible tolerance	±0,10
k	head height max.	3,8
p	thread pitch	3,5
	permissible tolerance	±0,1 x p
T - STAR	size	T30
Cross recess size Type Z		3

Ls			Standard thread lengths (full thread = lgV / partial thread = lgT)	
Nom dim.	min	max	lgV	lgT
40	38,5	41,0	33,0	
45	***43,5***	***46,0***	***38,0***	
50	48,5	51,0	43,0	33,0
55	***53,5***	***56,0***	***48,0***	***33,0***
60	58,5	61,0	53,0	38,0
65	***63,5***	***66,0***	***58,0***	***38,0***
70	68,5	71,0	61,0	43,0
75	***73,5***	***76,0***	***68,0***	***43,0***
80	78,5	81,0	68,0	48,0
90	***88,5***	***91,5***	***68,0***	***53,0***
100	98,5	101,5	68,0	58,0
110	***108,5***	***111,5***		***68,0***
120	118,5	121,5		68,0

Intermediate lengths on Ls possible

Other thread lengths in the range ≥4xd1 to max. standard length permitted.

Annex A16

SPAX®-S
Pan head

Self-tapping screw with full and partial thread

Material: cold rolled wire according to SPAX - Factory Standard
Stainless steel screws

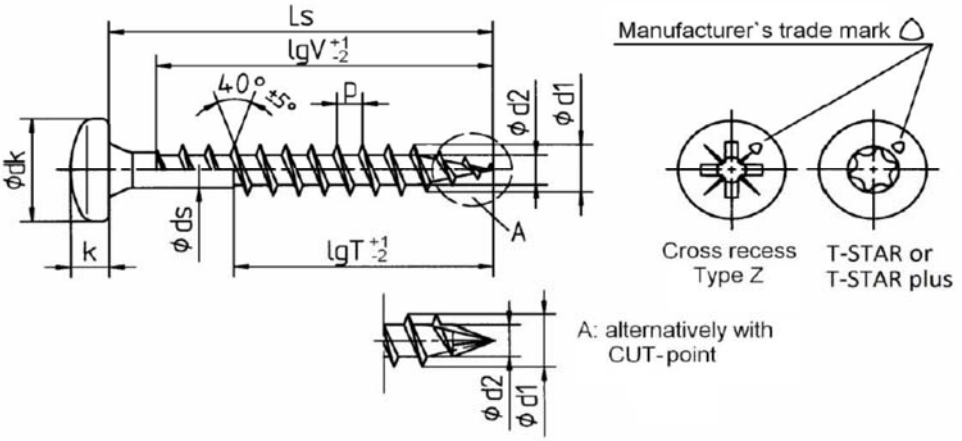

Nominal diameter			**3,0**	**3,5**	**4,0**	**4,5**	**5,0**	**6,0**
d1	thread size		3,0	3,5	4,0	4,5	5,1	6,1
	permissible tolerance		±0,20				±0,25	
dk	head diameter		5,9	7,0	7,9	9,0	9,9	11,9
	permissible tolerance		+0,1/-0,3	±0,3		-0,50		-0,60
d2	core diameter		2,1	2,4	2,8	3,0	3,4	3,8
	permissible tolerance		-0,30					
ds	shank diameter		2,25	2,60	3,00	3,30	3,75	4,30
	permissible tolerance		±0,10					
k	head hight max.		2,3	2,5	2,9	3,1	3,4	4,0
p	thread pitch		1,5	1,8	2,0	2,2	2,5	3,0
	permissible tolerance		±0,1 x p					
T - STAR	size		T10	T15	T20		T25	T30
Cross recess size Type Z			1	2				3

Ls			Standard thread lengths (full thread = lgV / partial thread = lgT)											
Nom.dim.	min	max	lgV	lgT	lgV	lgT	lgV	lgT	lgV	lgT	lgV	lgT	lgV	lgT
15	***14,0***	***15,5***	***13,0***											
16	16,0	17,5	15,0		15,0									
20	***18,5***	***20,5***	***18,0***	***12,5***	***18,0***		***18,0***							
25	23,5	25,5	23,0	18,0	23,0	18,0	23,0		22,5		22,0			
30	***28,5***	***30,5***	***28,0***	***18,0***	***27,0***	***18,0***	***27,5***	***18,0***	***27,5***		***27,0***		***27,0***	
35	33,5	36,0	33,0	23,0	32,0	23,0	32,5,	23,0	32,5	25,0	32,0	25,0	32,0	24,0
40	***38,5***	***41,0***	***36,0***	***23,0***	***37,0***	***23,0***	***37,5***	***23,0***	***37,0***	***25,0***	***37,0***	***27,0***	***37,0***	***24,0***
45	43,5	46,0	36,0	28,0		30,0	42,5	30,0	42,0	30,0	41,0	30,0	41,0	29,0
50	***48,5***	***51,0***		***28,0***		***32,0***	***47,5***	***32,5***	***47,0***	***32,5***	***46,0***	***32,0***	***46,0***	***32,0***
55	53,5	56,0		36,0		35,0	50,0	35,0	52,0	37,0	51,0	37,0	51,0	37,0
60	***58,5***	***61,0***				***35,0***	***50,0***	***35,0***	***57,0***	***37,0***	***56,0***	***37,0***	***56,0***	***37,0***
65	63,5	66,0				40,0		37,5	59,0	42,0	61,0	41,0	60,0	41,0
70	***68,5***	***71,0***						***37,5***	***59,0***	***42,0***	***61,0***	***41,0***	***60,0***	***41,0***
75	73,5	76,0						37,5		42,0	61,0	41,0	60,0	41,0
80	***78,5***	***81,0***						***37,5***		***47,0***	***61,0***	***46,0***	***60,0***	***46,0***
90	88,5	91,5								47,0		61,0		61,0
100	***98,5***	***101,5***										***61,0***		***61,0***
110	108,5	111,5										69,0		68,0
120	***118,5***	***121,5***										***69,0***		***68,0***
130	128,0	132,0												68,0
140	***138,0***	***142,0***												***68,0***
150	148,0	152,0												68,0
160	***158,0***	***162,0***												***68,0***

Intermediate lengths on Ls possible

Other thread lengths in the range ≥4xd1 to max. standard length permitted.

Annex A17

	SPAX®-S Pan head	Self-tapping screw with full and partial thread Material: cold rolled wire according to SPAX - Factory Standard Stainless steel screws

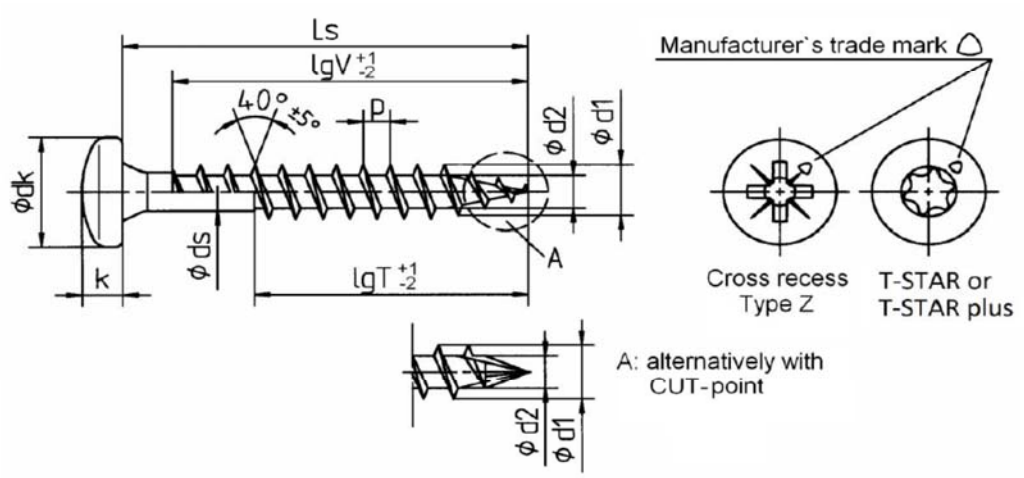

Nominal diameter		**7,0**
d1	thread size	7,1
	permissible tolerance	±0,25
dk	head diameter	13,5
	permissible tolerance	-0,60
d2	core diameter	4,5
	permissible tolerance	-0,30
ds	shank diameter	4,90
	permissible tolerance	±0,10
k	head hight max.	5
p	thread pitch	3,5
	permissible tolerance	±0,1 x p
T - STAR	size	T30
Cross recess size Type Z		3

Ls			Standard thread lengths (full thread = lgV / partial thread = lgT)	
Nom.dim.	min	max	lgV	lgT
50	48,5	51,0	46,0	33,0
55	***53,5***	***56,0***	***51,0***	***33,0***
60	58,5	61,0	56,0	38,0
65	***63,5***	***66,0***	***61,0***	***38,0***
70	68,5	71,0	61,0	43,0
75	***73,5***	***76,0***	***68,0***	***43,0***
80	78,5	81,0	68,0	48,0
90	***88,5***	***91,5***	***68,0***	***53,0***
100	98,5	101,5	68,0	58,0
110	***108,5***	***111,5***		***68,0***
120	118,5	121,5		68,0

Intermediate lengths on Ls possible

Other thread lengths in the range ≥4xd1 to max. standard length permitted.

Annex A18

SPAX®

Flat countersunk head

Self-tapping screw with full and partial thread

Material: cold rolled wire according to SPAX - Factory Standard
Screws of high carbon steel

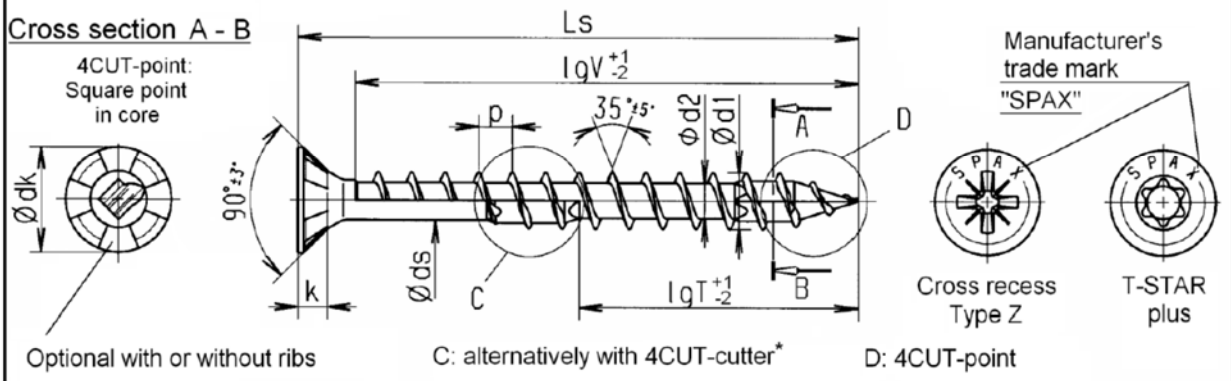

Nominal diameter				**3,5**	**4,0**	**4,5**	**5,0**	**6,0**
d1	thread size			3,5	4,0	4,5	5,0	6,0
	permissible tolerance			+0,3/-0,2				
dk	head diameter			6,9	7,9	8,7	9,6	11,6
	permissible tolerance			+0,1/-0,3		+0,1/-0,4		-0,60
d2	core diameter			2,25	2,6	2,9	3,2	3,9
	permissible tolerance			+0,1/-0,3			+0,2/-0,3	
ds	shank diameter			2,45	2,85	3,20	3,55	4,30
	permissible tolerance			±0,10				
k	head height max.			2,1	2,4	2,7	2,9	3,4
p	thread pitch			2,1	2,4	2,7	3,0	3,6
	permissible tolerance			±0,1 x p				
T-STAR plus size				T15	T20			T30
Cross reecess size Type Z				2				3

Ls			Standard thread lengths (full thread = lgV / partial thread = lgT)													
Nom.dim.	min	max					lgV	lgT	lgV	lgT	lgV	lgT	lgV	lgT	lgV	lgT
20	18,5	20,5					16,0		16,0							
25	***23,5***	***25,5***					***21,0***	***18,0***	***21,0***		***20,0***		***20,0***			
30	28,5	30,5					25,0	18,0	25,0	18,0	25,0		25,0		24,0	
35	***33,5***	***36,0***					***30,0***	***23,0***	***30,0***	***23,0***	***30,0***	***25,0***	***30,0***	***25,0***	***29,0***	***24,0***
40	38,5	41,0					35,0	23,0	35,0	23,0	34,0	25,0	35,0	27,0	34,0	24,0
45	***43,5***	***46,0***					***40,0***	***30,0***	***40,0***	***30,0***	***39,0***	***30,0***	***39,0***	***30,0***	***38,0***	***29,0***
50	48,5	51,0					40,0	32,0	45,0	32,5	44,0	32,5	44,0	32,0	43,0	32,0
55	***53,5***	***56,0***						***35,0***	***50,0***	***35,0***	***49,0***	***37,0***	***49,0***	***37,0***	***48,0***	***37,0***
60	58,5	61,0						35,0	50,0	35,0	54,0	37,0	54,0	37,0	53,0	37,0
65	***63,5***	***66,0***						***40,0***	***50,0***	***37,5***	***59,0***	***42,0***	***59,0***	***41,0***	***58,0***	***41,0***
70	68,5	71,0							50,0	37,5	59,0	42,0	61,0	41,0	61,0	41,0
75	***73,5***	***76,0***							***50,0***	***37,5***	***59,0***	***42,0***	***61,0***	***41,0***	***61,0***	***41,0***
80	78,5	81,0							50,0	37,5	59,0	47,0	61,0	46,0	61,0	46,0
90	***88,5***	***91,5***									***59,0***	***47,0***		***61,0***		***61,0***
100	98,5	101,5												61,0		61,0
110	***108,5***	***111,5***												***69,0****		***68,0****
120	118,5	121,5												69,0*		68,0*
130	***128,0***	***132,0***														***68,0****
140	138,0	142,0														68,0*
150	***148,0***	***152,0***														***68,0****
160	158,0	162,0														68,0*

Screws of Ø6,0 mm with partial thread additionally in lengths of 180 to 300 mm, in steps of 20 mm, LgT= 68,0 mm*

Intermediate lengths on Ls possible

Other thread lengths in the range ≥4xd1 to max. standard length permitted.

* Design C with lgT= max. 65,0 mm

SPAX®
Washer head

Self-tapping screw with full and partial thread

Material: cold rolled wire according to SPAX - Factory Standard
Screws of high carbon steel

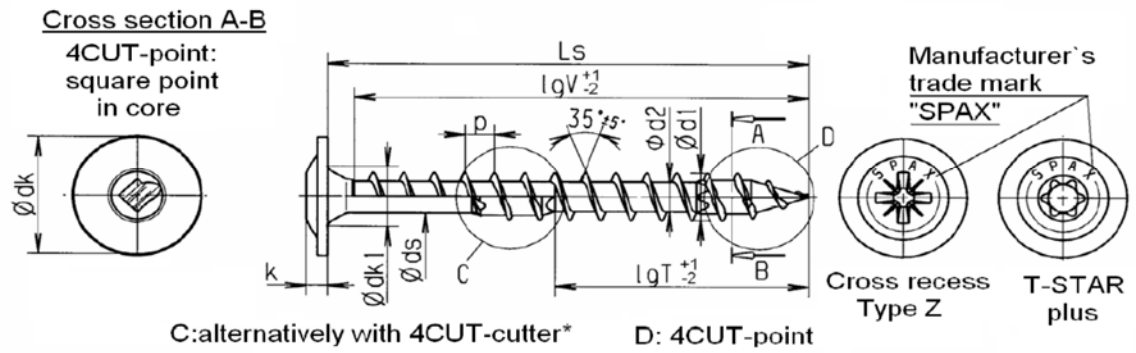

Nominal diameter				3,5	4	4,5	5	6
d1	thread size			3,5	4	4,5	5	6
	permissible tolerance			+0,3/-0,2				
dk	head diameter			8,5	9,5	10,5	11,5	13,5
	permissible tolerance			+0,1/-0,4		+0,1/-0,5		
dk1	countersink diameter			4,9	5	5,4	5,9	6,9
	permissible tolerance			+0,20				
d2	core diameter			2,25	2,6	2,9	3,2	3,9
	permissible tolerance			+0,1/-0,3			+0,2/-0,3	
ds	shank diameter			2,45	2,85	3,2	3,55	4,3
	permissible tolerance			±0,10				
k	head height max.			1,8	1,9	2	2,2	3,1
p	thread pitch			2,1	2,4	2,7	3	3,6
	permissible tolerance			±0,1 x p				
T-STAR plus size				T15	T20			T30
Cross recess size Type Z				2				

Ls			Standard thread lengths (full thread = lgV / partial thread = lgT)													
Nom.dim.	min	max					lgV	lgT	lgV	lgT	lgV	lgT	lgV	lgT	lgV	lgT
16	***16,0***	***17,5***					***15,0***									
20	18,5	20,5					18,0		18,0							
25	***23,5***	***25,5***					***23,0***	***18,0***	***23,0***		***22,5***		***22,0***			
30	28,5	30,5					27,0	18,0	27,5	18,0	27,5		27,0		27,0	
35	***33,5***	***36,0***					***32,0***	***23,0***	***32,5***	***23,0***	***32,5***	***25,0***	***32,0***	***25,0***	***32,0***	***24,0***
40	38,5	41,0					37,0	23,0	37,5	23,0	37,0	25,0	37,0	27,0	37,0	24,0
45	***43,5***	***46,0***					***40,0***	***30,0***	***42,5***	***30,0***	***42,0***	***30,0***	***41,0***	***30,0***	***41,0***	***29,0***
50	48,5	51,0					40,0	32,0	47,5	32,5	47,0	32,5	46,0	32,0	46,0	32,0
55	***53,5***	***56,0***						***35,0***	***50,0***	***35,0***	***52,0***	***37,0***	***51,0***	***37,0***	***51,0***	***37,0***
60	58,5	61,0						35,0	50,0	35,0	57,0	37,0	56,0	37,0	56,0	37,0
65	***63,5***	***66,0***						***40,0***	***50,0***	***37,5***	***59,0***	***42,0***	***61,0***	***41,0***	***61,0***	***41,0***
70	68,5	71,0							50,0	37,5	59,0	42,0	61,0	41,0	61,0	41,0
75	***73,5***	***76,0***							***50,0***	***37,5***	***59,0***	***42,0***	***61,0***	***41,0***	***61,0***	***41,0***
80	78,5	81,0									59,0	47,0	61,0	46,0	61,0	46,0
90	***88,5***	***91,5***									***59,0***	***47,0***		***61,0***		***61,0***
100	98,5	101,5												61,0		61,0
110	***108,5***	***111,5***												***69,0****		***68,0****
120	118,5	121,5												69,0**		68,0**
130	***128,0***	***132,0***														***68,0****
140	138,0	142,0														68,0**
150	***148,0***	***152,0***														***68,0****
160	158,0	162,0														68,0**

Screws of Ø6,0 mm with partial thread additionally in lengths of 180 to 300 mm, in steps of 20 mm, LgT= 68,0 mm*

Intermediate lengths on Ls possible

Other thread lengths in the range ≥4xd1 to max. standard length permitted.

* Design C with lgT= max. 65,0 mm

SPAX®

Raised countersunk head

Self-tapping screw with full and partial thread

Material: cold rolled wire according to SPAX - Factory Standard

Screws of high carbon steel

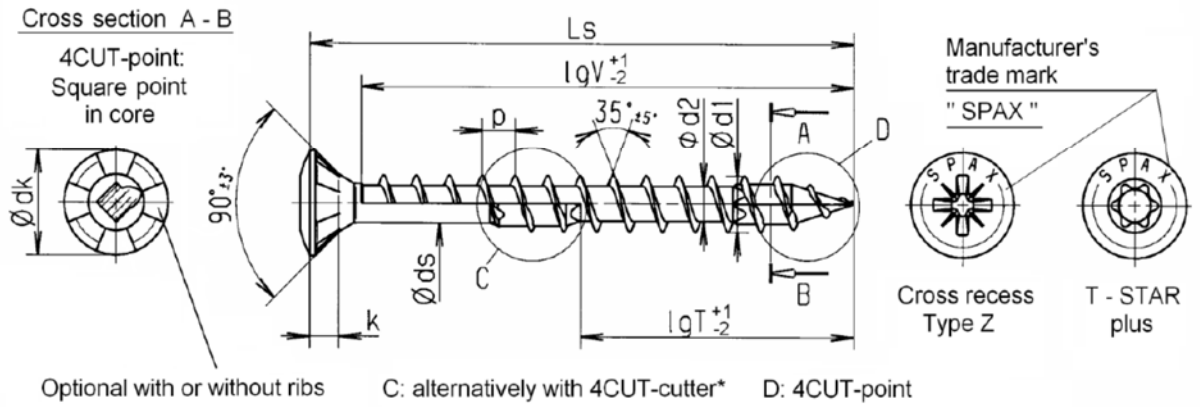

Nominal diamerer				**3,5**	**4,0**	**4,5**	**5,0**	**6,0**
d1	thread size			3,5	4,0	4,5	5,0	6,0
	permissible tolerance			+0,3/-0,2				
dk	head diameter			6,9	7,9	8,7	9,6	11,6
	permissible tolerance			+0,1/-0,3		+0,1/-0,4		-0,6
d2	core diameter			2,25	2,6	2,9	3,2	3,9
	permissible tolerance			+0,1/-0,3			+0,2/-0,3	
ds	shank diameter			2,45	2,85	3,2	3,55	4,3
	permissible tolerance			±0,10				
k	head height max.			2,1	2,4	2,7	2,9	3,4
p	thread pitch			2,1	2,4	2,7	3	3,6
	permissible tolerance			±0,1 x p				
T-STAR plus size				T15	T20			T30
Cross recess size Type Z				2				3

Ls			Standard thread lengths (full thread = lgV / partial thread = lgT)													
Nom.dim.	min	max					lgV	lgT	lgV	lgT	lgV	lgT	lgV	lgT	lgV	lgT
20	18,5	20,5					16,0		16,0							
25	***23,5***	***25,5***					***21,0***	***18,0***	***21,0***		***20,0***		***20,0***			
30	28,5	30,5					25,0	18,0	25,0	18,0	25,0		25,0		24,0	
35	***33,5***	***36,0***					***30,0***	***23,0***	***30,0***	***23,0***	***30,0***	***25,0***	***30,0***	***25,0***	***29,0***	
40	38,5	41,0					35,0	23,0	35,0	23,0	34,0	25,0	35,0	27,0	34,0	24,0
45	***43,5***	***46,0***					***40,0***	***30,0***	***40,0***	***30,0***	***39,0***	***30,0***	***39,0***	***30,0***	***38,0***	***29,0***
50	48,5	51,0					40,0	32,0	45,0	32,5	44,0	32,5	44,0	32,0	43,0	32,0
55	***53,5***	***56,0***						***35,0***	***50,0***	***35,0***	***49,0***	***37,0***	***49,0***	***37,0***	***48,0***	***37,0***
60	58,5	61,0						35,0	50,0	35,0	54,0	37,0	54,0	37,0	53,0	37,0
65	***63,5***	***66,0***						***40,0***	***50,0***	***37,5***	***59,0***	***42,0***	***59,0***	***41,0***	***58,0***	***41,0***
70	68,5	71,0							50,0	37,5	59,0	42,0	61,0	41,0	61,0	41,0
75	***73,5***	***76,0***							***50,0***	***37,5***	***59,0***	***42,0***	***61,0***	***41,0***	***61,0***	***41,0***
80	78,5	81,0							50,0	37,5	59,0	47,0	61,0	46,0	61,0	46,0
90	***88,5***	***91,5***									***59,0***	***47,0***		***61,0***		***61,0***
100	98,5	101,5												61,0		61,0
110	***108,5***	***111,5***												***69,0****		***68,0****
120	118,5	121,5												69,0*		68,0*
130	***128,0***	***132,0***														***68,0****
140	138,0	142,0														68,0*
150	***148,0***	***152,0***														***68,0****
160	158,0	162,0														68,0*

Screws of Ø6,0 mm with partial thread additionally in lengths of 180 to 300 mm, in steps of 20 mm, LgT= 68,0 mm*

Intermediate lengths on Ls possible

Other thread lengths in the range ≥4xd1 to max. standard length permitted.

* Design C with lgT= max. 65,0 mm

Annex A21

SPAX®

Pan head

Self-tapping screw with full and partial thread

Material: cold rolled wire according to SPAX - Factory Standard
Screws of high carbon steel

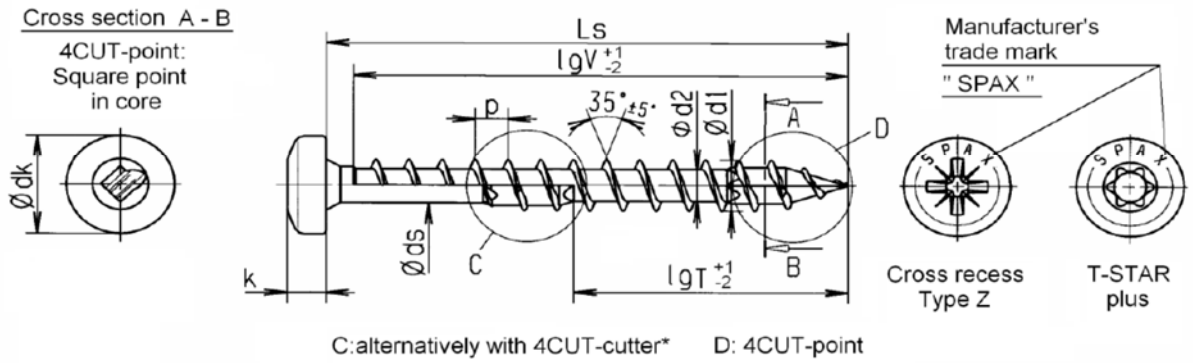

Nominal diameter						3,5	4,0	4,5	5,0	6,0
d1	thread size					3,5	4,0	4,5	5,0	6,0
	permissible tolerance					+0,3/-0,2				
dk	head diameter					7	7,9	9	9,9	11,9
	permissible tolerance					±0,3		-0,5		-0,6
d2	core diameter					2,25	2,6	2,9	3,2	3,9
	permissible tolerance					+0,1/-0,3			+0,2/-0,3	
ds	shank diameter					2,45	2,85	3,2	3,55	4,3
	permissible tolerance					±0,10				
k	head height max.					2,7	2,9	3,1	3,4	4
p	thread pitch					2,1	2,4	2,7	3	3,6
	permissible tolerance					±0,1 x p				
T-STAR plus size						T15	T20			T30
Cross recess size Z						2				3
Ls			Standard thread lengths (full thread = lgV / partial thread = lgT)							
Nom. dim.	min	max				lgV	lgT	lgV	lgT	lgV	lgT	lgV	lgT	lgV	lgT
16	***16,0***	***17,5***				***15,0***									
20	18,5	20,5				18,0		18,0							
25	***23,5***	***25,5***				***23,0***	***18,0***	***23,0***		***22,5***		***22,0***			
30	28,5	30,5				27,0	18,0	27,5	18,0	27,0		27,0		27,0	
35	***33,5***	***36,0***				***32,0***	***23,0***	***32,5***	***23,0***	***32,5***	***25,0***	***32,0***	***25,0***	***32,0***	***24,0***
40	38,5	41,0				37,0	23,0	37,5	23,0	37,0	25,0	37,0	27,0	37,0	24,0
45	***43,5***	***46,0***				***40,0***	***30,0***	***42,5***	***30,0***	***42,0***	***30,0***	***41,0***	***30,0***	***41,0***	***29,0***
50	48,5	51,0				40,0	32,0	47,5	32,5	47,0	32,5	46,0	32,0	46,0	32,0
55	***53,5***	***56,0***					***35,0***	***50,0***	***35,0***	***52,0***	***37,0***	***51,0***	***37,0***	***51,0***	***37,0***
60	58,5	61,0					35,0	50,0	35,0	57,0	37,0	56,0	37,0	56,0	37,0
65	***63,5***	***66,0***					***40,0***	***50,0***	***37,5***	***59,0***	***42,0***	***61,0***	***41,0***	***61,0***	***41,0***
70	68,5	71,0						50,0	37,5	59,0	42,0	61,0	41,0	61,0	41,0
75	***73,5***	***76,0***						***50,0***	***37,5***	***59,0***	***42,0***	***61,0***	***41,0***	***61,0***	***41,0***
80	78,5	81,0						50,0	37,5	59,0	47,0	61,0	46,0	61,0	46,0
90	***88,5***	***91,5***								***59,0***	***47,0***		***61,0***		***61,0***
100	98,5	101,5											61,0		61,0
110	***108,5***	***111,5***											***69,0****		***68,0****
120	118,5	121,5											69,0**		68,0**
130	***128,0***	***132,0***													***68,0****
140	138,0	142,0													68,0**
150	***148,0***	***152,0***													***68,0****
160	158,0	162,0													68,0**

Screws of Ø6,0 mm with partial thread additionally in lengths of 180 to 300 mm, in steps of 20 mm, LgT= 68,0 mm*

Intermediate lengths on Ls possible

Other thread lengths in the range ≥4xd1 to max. standard length permitted.

* Design C with lgT= max. 65,0 mm

Annex A22

SPAX®
Flat countersunk head

Self-tapping screw with full and partial thread

Material: cold rolled wire according to SPAX - Factory Standard
Stainless steel screws

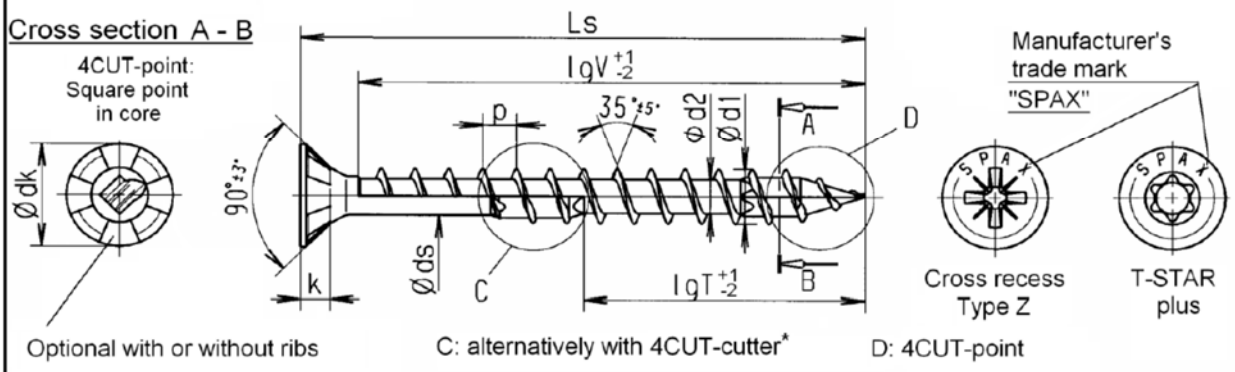

Nominal diameter						3,5		4,0		4,5		5,0		6,0	
d1	thread Size					3,5		4,0		4,5		5,1		6,1	
	permissible tolerance					+0,3/-0,2						±0,25			
dk	head diameter					7		8		8,8		9,7		11,6	
	permissible tolerance					-0,4				-0,5				-0,6	
d2	core diameter					2,5		2,8		3,1		3,4		3,9	
	permissible tolerance					+0,1/-0,3				+0,2 / -0,3					
ds	shank diameter					2,6		3		3,3		3,75		4,3	
	permissible tolerance					±0,10									
k	head height max.					2,1		2,4		2,7		2,9		3,4	
p	thread pitch					2,1		2,4		2,7		3		3,6	
	permissible tolerance					±0,1 x p									
T-STAR plus size						T15		T20						T30	
Cross reecess size Type Z						2								3	
Ls			Standard thread lengths (full thread = lgV / partial thread = lgT)												
Nom.dim.	min	max				lgV	lgT	lgV	lgT	lgV	lgT	lgV	lgT	lgV	lgT
20	18,5	20,5				16,0		16,0							
25	***23,5***	***25,5***				***21,0***	***18,0***	***21,0***		***20,0***		***20,0***			
30	28,5	30,5				25,0	18,0	25,0	18,0	25,0		25,0		24,0	
35	***33,5***	***36,0***				***30,0***	***23,0***	***30,0***	***23,0***	***30,0***	***25,0***	***30,0***	***25,0***	***29,0***	
40	38,5	41,0				35,0	23,0	35,0	23,0	34,0	25,0	35,0	27,0	34,0	24,0
45	***43,5***	***46,0***				***40,0***	***30,0***	***40,0***	***30,0***	***39,0***	***30,0***	***39,0***	***30,0***	***38,0***	***29,0***
50	48,5	51,0				40,0	32,0	45,0	32,5	44,0	32,5	44,0	32,0	43,0	32,0
55	***53,5***	***56,0***					***35,0***	***50,0***	***35,0***	***49,0***	***37,0***	***49,0***	***37,0***	***48,0***	***37,0***
60	58,5	61,0					35,0	50,0	35,0	54,0	37,0	54,0	37,0	53,0	37,0
65	***63,5***	***66,0***					***40,0***	***50,0***	***37,5***	***59,0***	***42,0***	***59,0***	***41,0***	***58,0***	***41,0***
70	68,5	71,0						50,0	37,5	59,0	42,0	61,0	41,0	61,0	41,0
75	***73,5***	***76,0***						***50,0***	***37,5***	***59***	***42,0***	***61,0***	***41,0***	***61,0***	***41,0***
80	78,5	81,0						50,0	37,5	59,0	47,0	61,0	46,0	61,0	46,0
90	***88,5***	***91,5***								***59,0***	***47,0***		***61,0***		***61,0***
100	98,5	101,5											61,0		61,0
110	***108,5***	***111,5***											***69,0****		***68,0****
120	118,5	121,5											69,0**		68,0**
130	***128,0***	***132,0***													***68,0****
140	138,0	142,0													68,0**
150	***148,0***	***152,0***													***68,0****
160	158,0	162,0													68,0**

Intermediate lengths on Ls possible

Other thread lengths in the range ≥4xd1 to max. standard length permitted.

* Design C with lgT= max. 65,0 mm

Annex A23

SPAX®
Washer head

Self-tapping screw with full and partial thread

Material: cold rolled wire according to SPAX - Factory Standard
Stainless steel screws

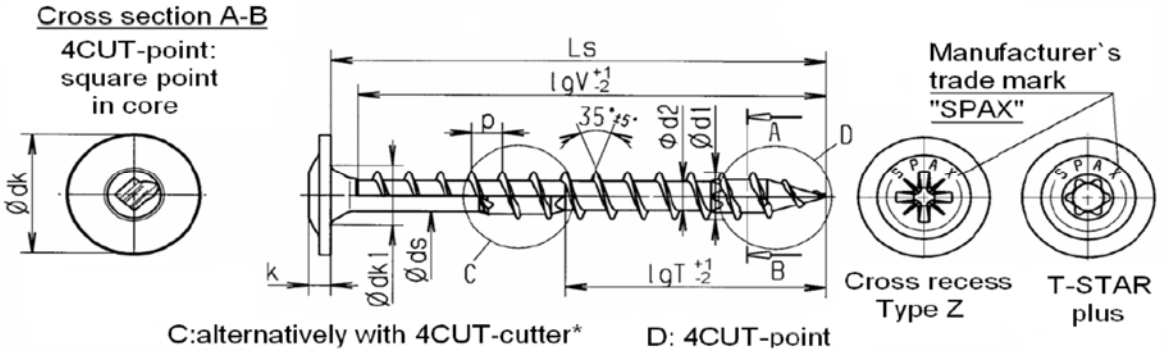

Nominal diameter					3,5	4,0	4,5	5,0	6,0
d1	thread size				3,5	4,0	4,5	5,1	6,1
	permissible tolerance				+0,3/-0,2			±0,25	
dk	head diameter				8,6	9,6	10,6	11,6	13,6
	permissible tolerance				-0,5		-0,6		
dk1	countersink diameter				4,9	5	5,4	5,9	6,9
	permissible tolerance				+0,20				
d2	core diameter				2,5	2,8	3,1	3,4	3,9
	permissible tolerance				+0,1/-0,2		+0,2/-0,3		
ds	shank diameter				2,6	3	3,3	3,75	4,3
	permissible tolerance				±0,10				
k	head height max.				1,8	1,9	2	2,2	3,1
p	thread pitch				2,1	2,4	2,7	3	3,6
	permissible tolerance				±0,1 x p				
T-STAR plus size					T15	T20			T30
Cross recess size Type Z					2				

Ls			Standard thread lengths (full thread = lgV / partial thread = lgT)													
Nom.dim.	min	max					lgV	lgT	lgV	lgT	lgV	lgT	lgV	lgT	lgV	lgT
16	***16,0***	***17,5***					***15,0***									
20	18,5	20,5					18,0		18,0							
25	***23,5***	***25,5***					***23,0***	***18,0***	***23,0***		***22,5***		***22,0***			
30	28,5	30,5					27,0	18,0	27,5	18,0	27,5		27,0		27,0	
35	***33,5***	***36,0***					***32,0***	***23,0***	***32,5***	***23,0***	***32,5***	***25,0***	***32,0***	***25,0***	***32,0***	***24,0***
40	38,5	41,0					37,0	23,0	37,5	23,0	37,0	25,0	37,0	27,0	37,0	24,0
45	***43,5***	***46,0***					***40,0***	***30,0***	***42,5***	***30,0***	***42,0***	***30,0***	***41,0***	***30,0***	***41,0***	***29,0***
50	48,5	51,0					40,0	32,0	47,5	32,5	47,0	32,5	46,0	32,0	46,0	32,0
55	***53,5***	***56,0***						***35,0***	***50,0***	***35,0***	***52,0***	***37,0***	***51,0***	***37,0***	***51,0***	***37,0***
60	58,5	61,0						35,0	50,0	35,0	57,0	37,0	56,0	37,0	56,0	37,0
65	***63,5***	***66,0***						***40,0***	***50,0***	***37,5***	***59,0***	***42,0***	***61,0***	***41,0***	***61,0***	***41,0***
70	68,5	71,0							50,0	37,5	59,0	42,0	61,0	41,0	61,0	41,0
75	***73,5***	***76,0***							***50,0***	***37,5***	***59,0***	***42,0***	***61,0***	***41,0***	***61,0***	***41,0***
80	78,5	81,0									59,0	47,0	61,0	46,0	61,0	46,0
90	***88,5***	***91,5***									***59,0***	***47,0***		***61,0***		***61,0***
100	98,5	101,5												61,0		61,0
110	***108,5***	***111,5***												***69,0****		***68,0****
120	118,5	121,5												69,0**		68,0**
130	***128,0***	***132,0***														***68,0****
140	138,0	142,0														68,0**
150	***148,0***	***152,0***														***68,0****
160	158,0	162,0														68,0**

Intermediate lengths on Ls possible

Other thread lengths in the range ≥4xd1 to max. standard length permitted.

* Design C with lgT= max. 65,0 mm

Annex A24

SPAX®

Raised countersunk head

Self-tapping screw with full and partial thread

Material: cold rolled wire according to SPAX - Factory Standard
Stainless steel screws

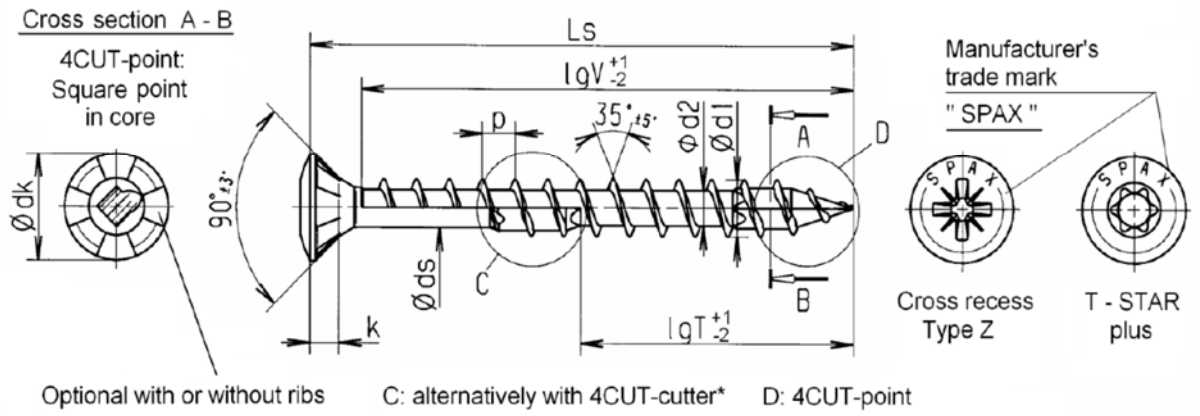

Nominal diamerer						**3,5**	**4,0**	**4,5**	**5,0**	**6,0**
d1	thread size					3,5	4	4,5	5,1	6,1
	permissible tolerance					+0,3/-0,2			±0,25	
dk	head diameter					7	8	8,8	9,7	11,6
	permissible tolerance					-0,4		-0,5		
d2	core diameter					2,5	2,8	3,1	3,4	3,9
	permissible tolerance					+0,1 / -0,3		+0,2 / -0,3		
ds	shank diameter					2,6	3	3,3	3,75	4,3
	permissible tolerance					±0,10				
k	head height max.					2,1	2,4	2,7	2,9	3,4
p	thread pitch					2,1	2,4	2,7	3	3,6
	permissible tolerance					±0,1 x p				
T-STAR plus size						T15	T20			T30
Cross recess size Type Z						2				3
Ls			Standard thread lengths (full thread = lgV / partial thread = lgT)							
Nom.dim.	min	max				lgV	lgT	lgV	lgT	lgV	lgT	lgV	lgT	lgV	lgT
20	18,5	20,5				16,0		16,0							
25	***23,5***	***25,5***				***21,0***	***18,0***	***21,0***		***20,0***		***20,0***			
30	28,5	30,5				25,0	18,0	25,0	18,0	25,0		25,0		24,0	
35	***33,5***	***36,0***				***30,0***	***23,0***	***30,0***	***23,0***	***30,0***	***25,0***	***30,0***	***25,0***	***29,0***	
40	38,5	41,0				35,0	23,0	35,0	23,0	34,0	25,0	35,0	27,0	34,0	24,0
45	***43,5***	***46,0***					***30,0***	***40,0***	***30,0***	***39,0***	***30,0***	***39,0***	***30,0***	***38,0***	***29,0***
50	48,5	51,0					32,0	45,0	32,5	44,0	32,5	44,0	32,0	43,0	32,0
55	***53,5***	***56,0***					***35,0***	***50,0***	***35,0***	***49,0***	***37,0***	***49,0***	***37,0***	***48,0***	***37,0***
60	58,5	61,0					35,0	50,0	35,0	54,0	37,0	54,0	37,0	53,0	37,0
65	***63,5***	***66,0***					***40,0***	***50,0***	***37,5***	***59,0***	***42,0***	***59,0***	***41,0***	***58,0***	***41,0***
70	68,5	71,0						50,0	37,5	59,0	42,0	61,0	41,0	61,0	41,0
75	***73,5***	***76,0***						***50,0***	***37,5***	***59,0***	***42,0***	***61,0***	***41,0***	***61,0***	***41,0***
80	78,5	81,0						50,0	37,5	59,0	47,0	61,0	46,0	61,0	46,0
90	***88,5***	***91,5***								***59,0***	***47,0***		***61,0***		***61,0***
100	98,5	101,5											61,0		61,0
110	***108,5***	***111,5***											***69,0****		***68,0****
120	118,5	121,5											69,0**		68,0**
130	***128,0***	***132,0***													***68,0****
140	138,0	142,0													68,0**
150	***148,0***	***152,0***													***68,0****
160	158,0	162,0													68,0**

Intermediate lengths on Ls possible

Other thread lengths in the range ≥4xd1 to max. standard length permitted.

* Design C with lgT= max. 65,0 mm

SPAX®

Pan head

Self-tapping screw with full and partial thread

Material: cold rolled wire according to SPAX - Factory Standard

Stainless steel screws

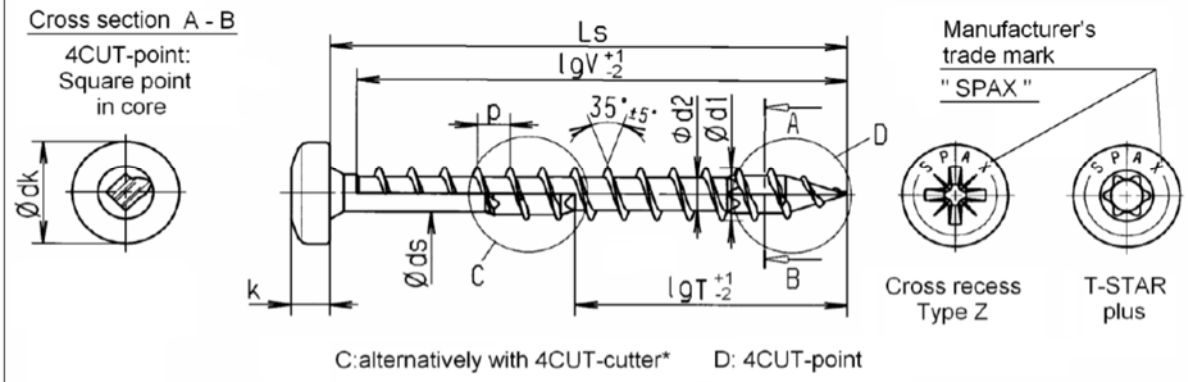

Nominal diameter						**3,5**	**4,0**	**4,5**	**5,0**	**6,0**
d1	thread size					3,5	4,0	4,5	5,1	6,1
	permissible tolerance					+0,3/-0,2			±0,25	
dk	head diameter					7	7,9	9	9,9	11,9
	permissible tolerance					±0,3		-0,5		-0,6
d2	core diameter					2,5	2,8	3,1	3,4	3,9
	permissible tolerance					+0,1/-0,3		+0,2/-0,3		
ds	shank diameter					2,6	3	3,3	3,75	4,3
	permissible tolerance					±0,10				
k	head height max.					2,7	2,9	3,1	3,4	4
p	thread pitch					2,1	2,4	2,7	3	3,6
	permissible tolerance					±0,1 x p				
T-STAR plus size						T15	T20			T30
Cross recess size Z						2				3

Ls			Standard thread lengths (full thread = lgV / partial thread = lgT)													
Nom. dim.	min	max					lgV	lgT	lgV	lgT	lgV	lgT	lgV	lgT	lgV	lgT
16	***16,0***	***17,5***					***15,0***									
20	18,5	20,5					18,0		18,0							
25	***23,5***	***25,5***					***23,0***	***18,0***	***23,0***		***22,5***		***22,0***			
30	28,5	30,5					27,0	18,0	27,5	18,0	27,5		27,0		27,0	
35	***33,5***	***36,0***					***32,0***	***23,0***	***32,5***	***23,0***	***32,5***	***25,0***	***32,0***	***25,0***	***32,0***	
40	38,5	41,0					37,0	23,0	37,5	23,0	37,0	25,0	37,0	27,0	37,0	24,0
45	***43,5***	***46,0***					***40,0***	***30,0***	***42,5***	***30,0***	***42,0***	***30,0***	***41,0***	***30,0***	***41,0***	***29,0***
50	48,5	51,0					40,0	32,0	47,5	32,5	47,0	32,5	46,0	32,0	46,0	32,0
55	***53,5***	***56,0***						***35,0***	***50,0***	***35,0***	***52,0***	***37,0***	***51,0***	***37,0***	***51,0***	***37,0***
60	58,5	61,0						35,0	50,0	35,0	57,0	37,0	56,0	37,0	56,0	37,0
65	***63,5***	***66,0***						***40,0***	***50,0***	***37,5***	***59,0***	***42,0***	***61,0***	***41,0***	***61,0***	***41,0***
70	68,5	71,0							50,0	37,5	59,0	42,0	61,0	41,0	61,0	41,0
75	***73,5***	***76,0***							***50,0***	***37,5***	***59,0***	***42,0***	***61,0***	***41,0***	***61,0***	***41,0***
80	78,5	81,0							50,0	37,5	59,0	47,0	61,0	46,0	61,0	46,0
90	***88,5***	***91,5***									***59,0***	***47,0***		***61,0***		***61,0***
100	98,5	101,5												61,0		61,0
110	***108,5***	***111,5***												***69,0****		***68,0****
120	118,5	121,5												69,0*		68,0*
130	***128,0***	***132,0***														***68,0****
140	138,0	142,0														68,0*
150	***148,0***	***152,0***														***68,0****
160	158,0	162,0														68,0*

Intermediate lengths on Ls possible

Other thread lengths in the range ≥4xd1 to max. standard length permitted.

* Design C with lgT= max. 65,0 mm

SPAX®-S

Flat countersunk head

Self-tapping screw with full and partial thread

Material: cold rolled wire according to SPAX - Factory standard

Screws of high carbon steel

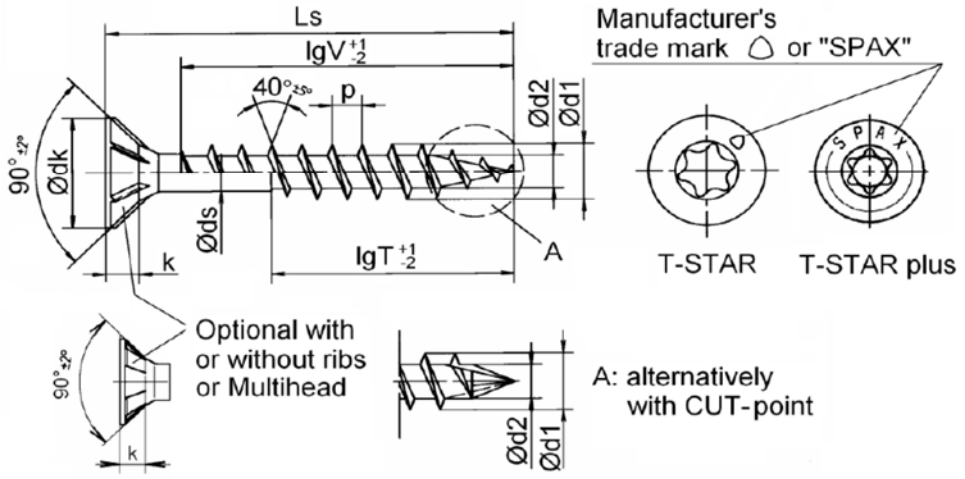

Nominal diameter		8,0	10,0	12,0
d1	thread size	8,1	10,1	12,0
	permissible tolerance	±0,40		
dk	head diameter	15,1	18,6	22,6
	permissible tolerance	-0,60		
d2	core diameter	5,0	6,1	7,3
	permissible tolerance	-0,30		±0,3
ds	shank diameter	5,70	6,80	8,50
	permissible tolerance	±0,25		
k	head height max.	4,4	6,0	6,6
p	thread pitch	4,0	5,0	6,0
	permissible tolerance	±0,1 x p		
T - STAR	size	T40	T50	T50

Ls			Standard thread lengths (full thread=lgV / partial thread = lgT)					
Nom.dim.	min	max	lgV	lgT	lgV	lgT	lgV	lgT
40	38,5	41,5	32,0					
45	***43,5***	***46,5***	***37,0***					
50	48,5	51,5	42,0	32,0	40,0			
55	***53,5***	***56,5***	***47,0***	***32,0***	***45,0***			
60	58,5	61,5	52,0	37,0	50,0		50,0	
65	***63,5***	***66,5***	***57,0***	***37,0***	***55,0***	***40,0***	***55,0***	
70	68,5	71,5	61,0	42,0	60,0	40,0	60,0	
75	***73,5***	***76,5***	***61,0***	***42,0***	***60,0***	***45,0***	***60,0***	
80	78,5	81,5	70,0	47,0	70,0	50,0	70,0	50,0
90	***88,5***	***91,5***	***80,0***	***52,0***	***80,0***	***55,0***	***80,0***	***55,0***
100	98,5	101,5	80,0	57,0	80,0	60,0	80,0	60,0
110	***108,5***	***111,5***	***80,0***	***70,0***	***80,0***	***70,0***		***80,0***
120	118,5	121,5	80,0	70,0	80,0	70,0		80,0
130	***128,0***	***132,0***	***80,0***	***70,0***	***80,0***	***70,0***		***80,0***
140	138,0	142,0		80,0		80,0		80,0
150	***148,0***	***152,0***		***80,0***		***80,0***		***100,0***
160	158,0	162,0		80,0		80,0		100,0
180	***178,0***	***182,0***		***80,0***		***80,0***		***100,0***
200	198,0	202,0		80,0		80,0		100,0
to								
600	***597,0***	***602,0***		***80,0***		***80,0***		***100,0***

Intermediate lengths on Ls possible

Other thread lengths in the range ≥4xd1 to max. standard length permitted

SPAX®-S
Washer head

Self-tapping screw with full and partial thread

Material: cold rolled wire according to SPAX - Factory standard
Screws of high carbon steel

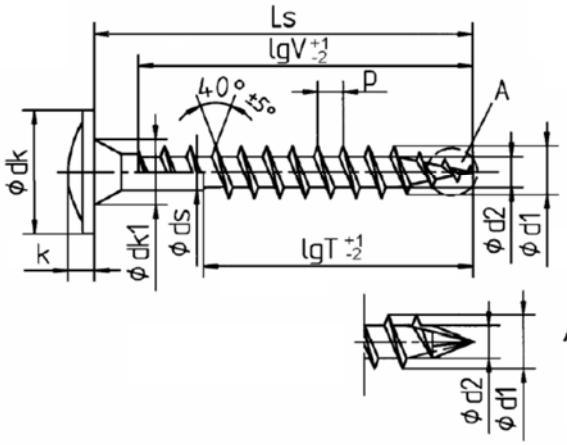

Manufacturer`s trade mark ⌂ or "SPAX"

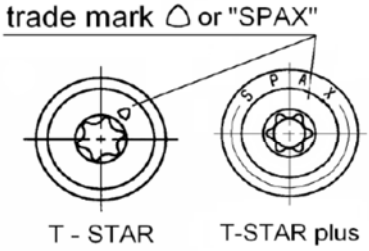

A: alternatively with CUT-point

Nominal diameter		8,0			10,0	12,0		
d1	thread size	8,1			10,1	12,0		
	permissible tolerance	±0,40						
dk	head diameter	18,0	20,0	22,0	25,0	31,0		
	permissible tolerance	±0,9	±1,0					
dk1	countersink diameter	9,0			12,0	14,0		
	permissible tolerance	+0,30						
d2	core diameter	5,0			6,1	7,3		
	permissible tolerance	-0,30				±0,3		
ds	shamk diameter	5,70			6,80	8,50		
	permissible tolerance	±0,25						
k	head height max.	4,0			4,7	5,6		
p	thread pitch	4,0			5,0	6,0		
	permissible tolerance	±0,1 x p						
T - STAR	size	T40			T50			

Ls			Standard thread lengths (full thread=lgV / partial thread = lgT)									
Nom.dim.	min	max	lgV	lgT	lgV	lgT	lgV	lgT				
40	38,5	41,5	37,0									
45	***43,5***	***46,5***	***42,0***									
50	48,5	51,5	46,0	32,0								
55	***53,5***	***56,5***	***51,0***	***32,0***	***50,0***		***50,0***					
60	58,5	61,5	56,0	37,0	55,0		55,0					
65	***63,5***	***66,5***	***61,0***	***37,0***	***60,0***	***40,0***	***60,0***					
70	68,5	71,5	61,0	42,0	60,0	40,0	60,0					
75	***73,5***	***76,5***	***70,0***	***42,0***	***70,0***	***45,0***	***70,0***					
80	78,5	81,5	70,0	47,0	70,0	50,0	70,0	50,0				
90	***88,5***	***91,5***	***80,0***	***52,0***	***80,0***	***55,0***	***80,0***	***55,0***				
100	98,5	101,5	80,0	57,0	80,0	60,0	80,0	60,0				
110	***108,5***	***111,5***	***80,0***	***70,0***	***80,0***	***70,0***		***80,0***				
120	118,5	121,5	80,0	70,0	80,0	70,0		80,0				
130	***128,0***	***132,0***	***80,0***	***70,0***	***80,0***	***70,0***		***80,0***				
140	138,0	142,0		80,0		80,0		80,0				
150	***148,0***	***152,0***		***80,0***		***80,0***		***100,0***				
160	158,0	162,0		80,0		80,0		100,0				
180	***178,0***	***182,0***		***80,0***		***80,0***		***100,0***				
200	198,0	202,0		80,0		80,0		100,0				
to												
600	***597,0***	***602,0***		***80,0***		***80,0***		***100,0***				

Intermediate lengths on Ls possible

Other thread lengths in the range ≥4xd1 to max. standard length permitted

Annex A28

SPAX®-S

Raised countersunk head

Self-tapping screw with full and partial thread

Material: cold rolled wire according to SPAX - Factory standard

Screws of high carbon steel

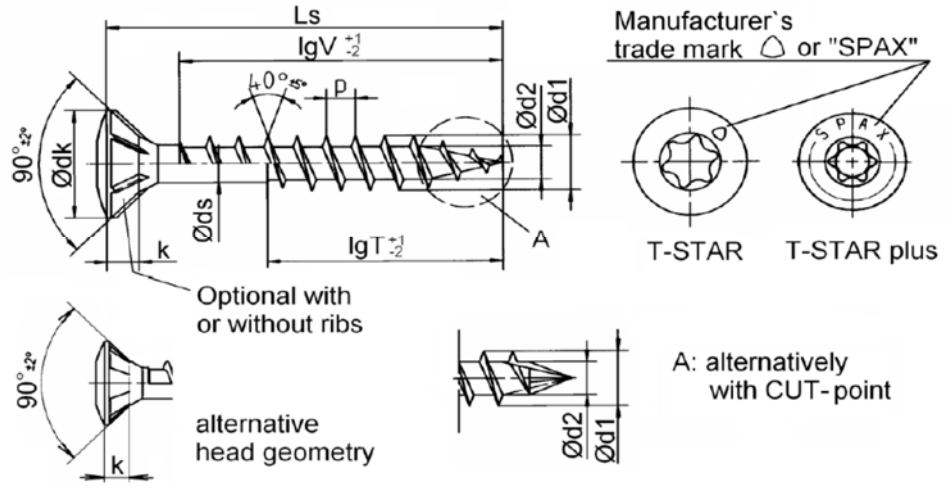

Nominal diameter		8,0	10,0	12,0
d1	thread size	8,1	10,1	12,0
	permissible tolerance	±0,40		
dk	head diameter	15,1	18,6	22,6
	permissible tolerance	-0,60		
d2	core diameter	5,0	6,1	7,3
	permissible tolerance	-0,30		±0,3
ds	shank diameter	5,70	6,80	8,50
	permissible tolerance	±0,25		
k	head height max.	4,4	6,0	6,6
p	thread pitch	4,0	5,0	6,0
	permissible tolerance	±0,1 x p		
T - STAR	size	T40	T50	T50

Ls			Standard thread lengths (full thread=lgV / partial thread = lgT)					
Nom.dim.	min	max	lgV	lgT	lgV	lgT	lgV	lgT
40	38,5	41,5	32,0					
45	***43,5***	***46,5***	***37,0***					
50	48,5	51,5	42,0	32,0	40,0			
55	***53,5***	***56,5***	***47,0***	***32,0***	***45,0***			
60	58,5	61,5	52,0	37,0	50,0		50,0	
65	***63,5***	***66,5***	***57,0***	***37,0***	***55,0***	***40,0***	***55,0***	
70	68,5	71,5	61,0	42,0	60,0	40,0	60,0	
75	***73,5***	***76,5***	***61,0***	***42,0***	***60,0***	***45,0***	***60,0***	
80	78,5	81,5	70,0	47,0	70,0	50,0	70,0	50,0
90	***88,5***	***91,5***	***80,0***	***52,0***	***80,0***	***55,0***	***80,0***	***55,0***
100	98,5	101,5	80,0	57,0	80,0	60,0	80,0	60,0
110	***108,5***	***111,5***	***80,0***	***70,0***	***80,0***	***70,0***		***80,0***
120	118,5	121,5	80,0	70,0	80,0	70,0		80,0
130	***128,0***	***132,0***	***80,0***	***70,0***	***80,0***	***70,0***		***80,0***
140	138,0	142,0		80,0		80,0		80,0
150	***148,0***	***152,0***		***80,0***		***80,0***		***100,0***
160	158,0	162,0		80,0		80,0		100,0
180	***178,0***	***182,0***		***80,0***		***80,0***		***100,0***
200	198,0	202,0		80,0		80,0		100,0
to								
600	***597,0***	***602,0***		***80,0***		***80,0***		***100,0***

Intermediate lengths on Ls possible

Other thread lengths in the range ≥4xd1 to max. standard length permitted

Annex A29

SPAX®-S
Pan head

Self-tapping screw with full and partial thread

Material: cold rolled wire according to SPAX - Factory standard
Screws of high carbon steel

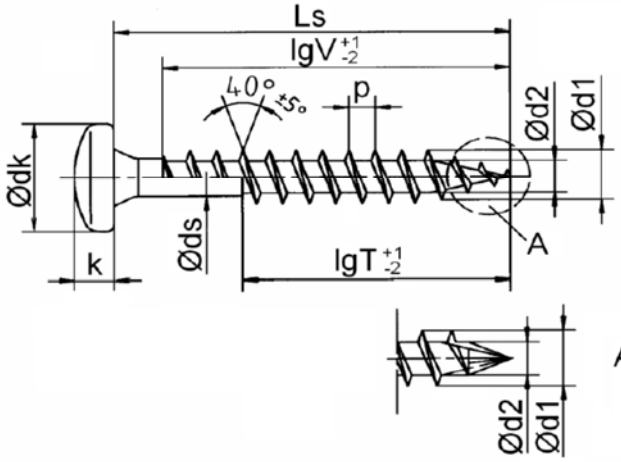

Manufacturer's trade mark ⌂ or "SPAX"

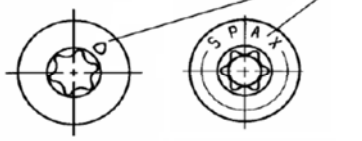

A: alternatively with CUT-point

Nominal diameter		**8,0**	**10,0**	**12,0**
d1	thread size	8,1	10,1	12,0
	permissible tolerance	±0,40		
dk	head diameter	15,5	19,0	23,0
	permissible tolerance	-0,60		
d2	core diameter	5,0	6,1	7,3
	permissible tolerance	-0,30		±0,3
ds	shank diameter	5,70	6,80	8,50
	permissible tolerance	±0,25		
k	head height max.	5,7	7,1	8,5
R	raised radius	16,0	20,0	24,0
p	thread pitch	4,0	5,0	6,0
	permissible tolerance	±0,1 x p		
T - STAR	size	T40	T50	T50

Ls			Standard thread lengths (full thread=lgV / partial thread = lgT)					
Nom.dim.	min	max	lgV	lgT	lgV	lgT	lgV	lgT
40	38,0	41,5	37,0					
45	***43,0***	***46,5***	***42,0***					
50	48,5	51,5	46,0	32,0				
55	***53,5***	***56,5***	***51,0***	***32,0***	***50,0***		***50,0***	
60	58,5	61,5	56,0	37,0	55,0		55,0	
65	***63,5***	***66,5***	***61,0***	***37,0***	***60,0***	***40,0***	***60,0***	
70	68,5	71,5	61,0	42,0	60,0	40,0	60,0	
75	***73,5***	***76,5***	***70,0***	***42,0***	***70,0***	***45,0***	***70,0***	
80	78,5	81,5	70,0	47,0	70,0	50,0	70,0	50,0
90	***88,5***	***91,5***	***80,0***	***52,0***	***80,0***	***55,0***	***80,0***	***55,0***
100	98,5	101,5	80,0	57,0	80,0	60,0	80,0	60,0
110	***108,5***	***111,5***	***80,0***	***70,0***	***80,0***	***70,0***		***80,0***
120	118,5	121,5	80,0	70,0	80,0	70,0		80,0
130	***128,0***	***132,0***	***80,0***	***70,0***	***80,0***	***70,0***		***80,0***
140	138,0	142,0		80,0		80,0		80,0
150	***148,0***	***152,0***		***80,0***		***80,0***		***100,0***
160	158,0	162,0		80,0		80,0		100,0
180	***178,0***	***182,0***		***80,0***		***80,0***		***100,0***
200	198,0	202,0		80,0		80,0		100,0
to								
600	***597,0***	***602,0***		***80,0***		***80,0***		***100,0***

Intermediate lengths on Ls possible

Other thread lengths in the range ≥4xd1 to max. standard length permitted

SPAX®-S

Hex. head with/without flange

Self-tapping screw with full and partial thread

Material: cold rolled wire according to SPAX - Factory standard

Screws of high carbon steel

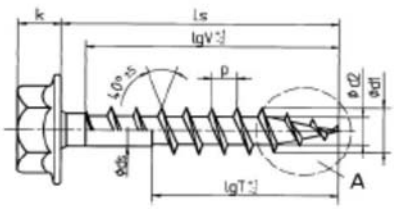

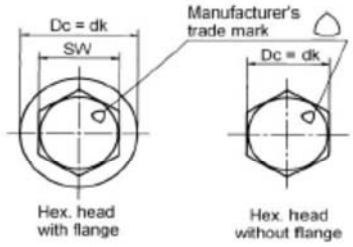

A: alternatively with CUT-point

		with flange			without flange		
Nominal diameter		**8,0**	**10,0**	**12,0**	**8,0**	**10,0**	**12,0**
d1	thread size	8,1	10,1	12,1	8,1	10,1	12,0
	permissible tolerance	±0,40			±0,40		
SW	wrench size	10	13	16	10	13	16
Dc	flange diamerer	17,0	20,8	24,7			
	permissible tolerance	-1,00					
d2	core diameter	5,0	6,1	7,3	5,0	6,1	7,3
	permissible tolerance	-0,30		±0,3	-0,30		±0,3
ds	shank diameter	5,70	6,80	8,50	5,70	6,80	8,50
	permissible tolerance	±0,25			±0,25		
k	head height max.	8,5	9,7	12,1	6,0	7,0	8,0
p	thread pitch	4,0	5,0	6,0	4,0	5,0	6,0
	permissible tolerance	±0,1 x p			±0,1 x p		

Ls			Standard thread lengths (full thread=lgV / partial thread = lgT)											
Nom.dim.	min	max	lgV	lgT	lgV	lgT	lgV	lgT	lgV	lgT	lgV	lgT	lgV	lgT
40	38,5	41,5	37,0						37,0					
45	*43,5*	*46,5*	*42,0*						*42,0*					
50	48,5	51,5	46,0	32,0	45,0				46,0	32,0	45,0			
55	***53,5***	***56,5***	***51,0***	***32,0***	***50,0***		***50,0***		***51,0***	***32,0***	***50,0***		***50,0***	
60	58,5	61,5	56,0	37,0	55,0		55,0		56,0	37,0	55,0		55,0	
65	***63,5***	***66,5***	***61,0***	***37,0***	***60,0***	***40,0***	***60,0***		***61,0***	***37,0***	***60,0***	***40,0***	***60,0***	
70	68,5	71,5	61,0	42,0	60,0	40,0	60,0		61,0	42,0	60,0	40,0	60,0	
75	***73,5***	***76,5***	***70,0***	***42,0***	***70,0***	***45,0***	***70,0***		***70,0***	***42,0***	***70,0***	***45,0***	***70,0***	
80	78,5	81,5	70,0	47,0	70,0	50,0	70,0	50,0	70,0	47,0	70,0	50,0	70,0	50,0
90	***88,5***	***91,5***	***80,0***	***52,0***	***80,0***	***55,0***	***80,0***	***55,0***	***80,0***	***52,0***	***80,0***	***55,0***	***80,0***	***55,0***
100	98,5	101,5	80,0	57,0	80,0	60,0	80,0	60,0	80,0	57,0	80,0	60,0	80,0	60,0
110	***108,5***	***111,5***	***80,0***	***70,0***	***80,0***	***70,0***		***80,0***	***80,0***	***70,0***	***80,0***	***70,0***		***80,0***
120	118,5	121,5	80,0	70,0	80,0	70,0		80,0	80,0	70,0	80,0	70,0		80,0
130	***128,0***	***132,0***	***80,0***	***70,0***	***80,0***	***70,0***		***80,0***	***80,0***	***70,0***	***80,0***	***70,0***		***80,0***
140	138,0	142,0		80,0		80,0		80,0		80,0		80,0		80,0
150	***148,0***	***152,0***		***80,0***		***80,0***		***100,0***		***80,0***		***80,0***		***100,0***
160	158,0	162,0		80,0		80,0		100,0		80,0		80,0		100,0
180	***178,0***	***182,0***		***80,0***		***80,0***		***100,0***		***80,0***		***80,0***		***100,0***
200	198,0	202,0		80,0		80,0		100,0		80,0		80,0		100,0
to														
600	***597,0***	***602,0***		***80,0***		***80,0***		***100,0***		***80,0***		***80,0***		***100,0***

Intermediate lengths on Ls possible

Other thread lengths in the range ≥4xd1 to max. standard length permitted

Annex A31

SPAX®

Flat countersunk head

Self-tapping screw with full and partial thread

Material: cold rolled wire according to SPAX - Factory standard

Screws of high carbon steel

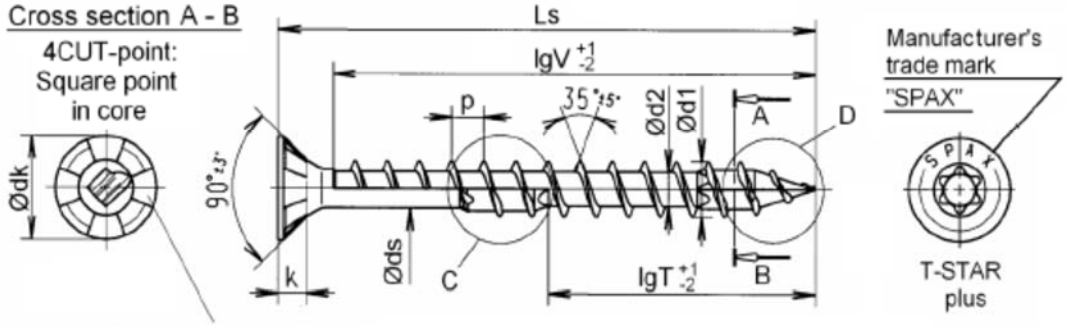

Optional with or without ribs C: alternatively with 4CUT-cutter D: 4CUT-point

Nominal diameter		8,0	10,0					
d1	thread size	8,1	10,0					
	permissible tolerance	±0,40	±0,40					
dk	head diameter	15,1	18,6					
	permissible tolerance	-0,60	-0,60					
d2	core diameter	5,0	6,1					
	permissible tolerance	±0,20	±0,20					
ds	shank diameter	5,70	6,80					
	permissible tolerance	±0,25	±0,25					
k	head height max.	4,4	6,0					
p	thread pitch	4,8	6,0					
	permissible	±0,1 x p	±0,1 x p					
T-STAR plus size		T40	T50					

Ls			Standard thread lengths (full thread=lgV / partial thread = lgT)															
Nom.dim.	min	max	lgV	lgT	lgV	lgT												
40	38,5	41,5	32,0															
45	*43,5*	*46,5*	*37,0*															
50	48,5	51,5	42,0	32,0	40,0													
55	*53,5*	*56,5*	*47,0*	*32,0*	*45,0*													
60	58,5	61,5	52,0	37,0	50,0													
65	*63,5*	*66,5*	*57,0*	*37,0*	*55,0*													
70	68,5	71,5	61,0	42,0	60,0													
75	*73,5*	*76,5*	*61,0*	*42,0*	*60,0*													
80	78,5	81,5	70,0	47,0	70,0	50,0												
90	*88,5*	*91,5*	*80,0*	*52,0*	*80,0*	*55,0*												
100	98,5	101,5	80,0	57,0	80,0	60,0												
110	*108,5*	*111,5*	*80,0*	*70,0*	*80,0*	*80,0*												
120	118,5	121,5	80,0	70,0	80,0	80,0												
130	*128,0*	*132,0*	*80,0*	*70,0*	*80,0*	*80,0*												
140	138,0	142,0		80,0		80,0												
150	*148,0*	*152,0*		*80,0*		*80,0*												
160	158,0	162,0		80,0		80,0												
180	*178,0*	*182,0*		*80,0*		*80,0*												
200	198,0	202,0		80,0		80,0												
to																		
600	*597,0*	*602,0*		*80,0*		*80,0*												

Intermediate lengths on Ls possible

Other thread lengths in the range ≥4xd1 to max. standard length permitted

Annex A32

SPAX®
Washer head

Self-tapping screw with full and partial thread

Material: cold rolled wire according to SPAX - Factory standard
Screws of high carbon steel

Cross section A - B

4CUT-point:
Square point
in core

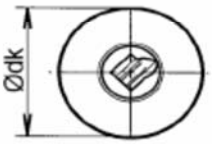

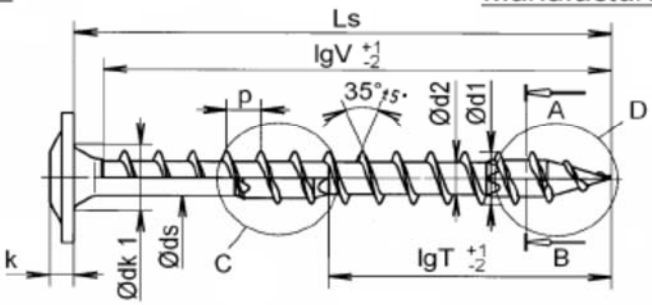

C:alternatively with 4CUT-cutter D: 4CUT-point

Manufacturer's trade mark
" SPAX "

T-STAR
plus

Nominal diameter		8,0				10,0		
d1	thread size	8,1				10,0		
	permissible tolerance	±0,40				±0,40		
dk	head diameter	18,0	**20,0**	22,0	24,0	23,0	**25,0**	27,0
	permissible tolerance	±1,0				±1,0		
dk1	countersink diameter	9,00				12,00		
	permissible tolerance	+0,50				+0,5		
d2	core diameter	5,0				6,1		
	permissible tolerance	±0,20				±0,20		
ds	shank diameter	5,70				6,80		
	permissible tolerance	±0,25				±0,25		
k	head height max.	4,3				4,7		
p	thread pitch	4,8				6,0		
	permissible tolerance	±0,1 x p				±0,1 x p		
T-STAR plus size		T40				T50		

Ls Nom.dim.	min	max	Standard thread lengths (full thread=lgV / partial thread = lgT) lgV	lgT	lgV	lgT
40	38,5	41,5	37,0			
45	*43,5*	*46,5*	*42,0*			
50	48,5	51,5	46,0	32,0	45,0	
55	*53,5*	*56,5*	*51,0*	*32,0*	*50,0*	
60	58,5	61,5	56,0	37,0	55,0	
65	*63,5*	*66,5*	*61,0*	*37,0*	*60,0*	
70	68,5	71,5	61,0	42,0	60,0	
75	*73,5*	*76,5*	*70,0*	*42,0*	*70,0*	
80	78,5	81,5	70,0	47,0	70,0	50,0
90	*88,5*	*91,5*	*80,0*	*52,0*	*80,0*	*55,0*
100	98,5	101,5	80,0	57,0	80,0	60,0
110	*108,5*	*111,5*	*80,0*	*70,0*	*80,0*	*80,0*
120	118,5	121,5	80,0	70,0	80,0	80,0
130	*128,0*	*132,0*	*80,0*	*70,0*	*80,0*	*80,0*
140	138,0	142,0		80,0		80,0
150	*148,0*	*152,0*		*80,0*		*80,0*
160	158,0	162,0		80,0		80,0
180	*178,0*	*182,0*		*80,0*		*80,0*
200	198,0	202,0		80,0		80,0
to						
*600**	*597,0*	*602,0*		*80,0*		*80,0*

Intermediate lengths on Ls possible
[ ] = Preferred size

*for d1=10,0 Ls up to 1.000 mm possible

Other thread lengths in the range ≥4xd1 to max. standard length permitted

Annex A33

SPAX®
Raised coutersunk head

Self-tapping screw with full and partial thread

Material: cold rolled wire according to SPAX - Factory standard
Screws of high carbon steel

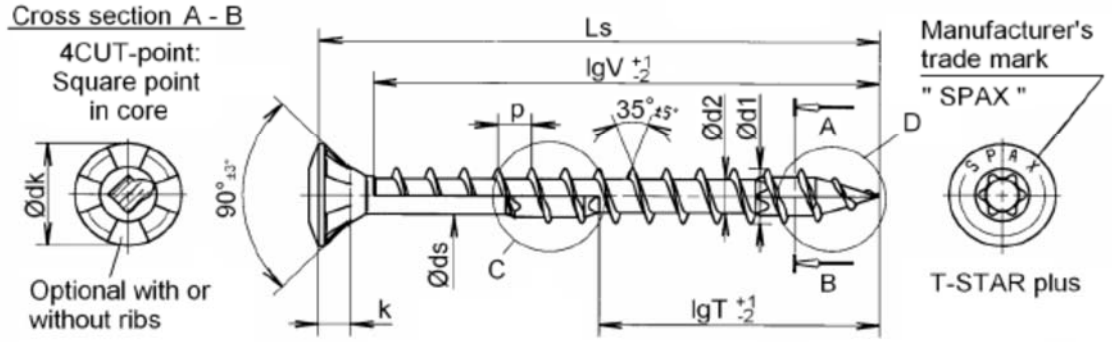

C: alternatively with 4CUT-cutter D: 4CUT-point

Nominal diameter		8,0	10,0
d1	thread size	8,1	10,0
	permissible tolerance	±0,40	±0,40
dk	head diameter	15,1	18,6
	permissible tolerance	-0,60	-0,60
d2	core diameter	5,0	6,1
	permissible tolerance	±0,20	±0,20
ds	shank diameter	5,70	6,80
	permissible tolerance	±0,25	±0,25
k	head height max.	4,4	6,0
p	thread pitch	4,8	6,0
	permissible tolerance	±0,1 x p	±0,1 x p
T-STAR plus size		T40	T50

Ls			Standard thread lengths (full thread=lgV / partial thread = lgT)			
Nom.dim.	min	max	lgV	lgT	lgV	lgT
40	38,5	41,5	32,0			
45	*43,5*	*46,5*	*37,0*			
50	48,5	51,5	42,0	32,0	40,0	
55	*53,5*	*56,5*	*47,0*	*32,0*	*45,0*	
60	58,5	61,5	52,0	37,0	50,0	
65	*63,5*	*66,5*	*57,0*	*37,0*	*55,0*	
70	68,5	71,5	61,0	42,0	60,0	
75	*73,5*	*76,5*	*61,0*	*42,0*	*60,0*	
80	78,5	81,5	70,0	47,0	70,0	50,0
90	*88,5*	*91,5*	*80,0*	*52,0*	*80,0*	*55,0*
100	98,5	101,5	80,0	57,0	80,0	60,0
110	*108,5*	*111,5*	*80,0*	*70,0*	*80,0*	*80,0*
120	118,5	121,5	80,0	70,0	80,0	80,0
130	*128,0*	*132,0*	*80,0*	*70,0*	*80,0*	*80,0*
140	138,0	142,0		80,0		80,0
150	*148,0*	*152,0*		*80,0*		*80,0*
160	158,0	162,0		80,0		80,0
180	*178,0*	*182,0*		*80,0*		*80,0*
200	198,0	202,0		80,0		80,0
to						
600	*597,0*	*602,0*		*80,0*		*80,0*

Intermediate lengths on Ls possible

Other thread lengths in the range ≥4xd1
to max. standard length permitted

Annex A34

SPAX®

Pan head

Self-tapping screw with full and partial thread

Material: cold rolled wire according to SPAX - Factory standard

Screws of high carbon steel

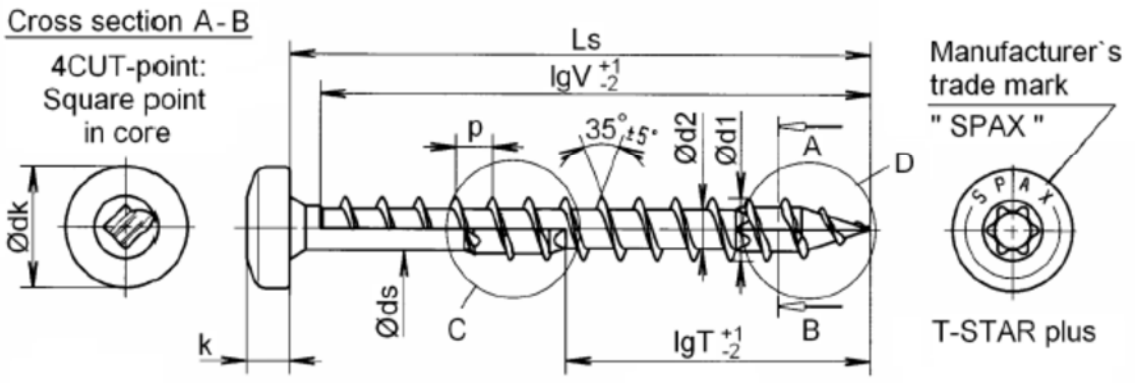

C: alternatively with 4CUT-cutter D: 4CUT-point

Nominal diameter		8,0	10,0
d1	thread size	8,1	10,0
	permissible tolerance	±0,40	±0,40
dk	head diameter	15,5	19,0
	permissible tolerance	-0,60	-0,60
d2	core diameter	5,0	6,1
	permissible tolerance	±0,20	±0,20
ds	shank diameter	5,70	6,80
	permissible tolerance	±0,25	±0,25
k	head height max.	6,0	7,1
p	thread pitch	4,8	6,0
	permissible tolerance	±0,1 x p	±0,1 x p
T-STAR plus size		T40	T50

Ls			Standard thread lengths (full thread=lgV / partial thread = lgT)			
Nom.dim.	min	max	lgV	lgT	lgV	lgT
40,0	38,5	41,5	37,0			
45,0	*43,5*	*56,5*	*42,0*			
50	48,5	51,5	46,0	32,0	40,0	
55	*53,5*	*56,5*	*51,0*	*32,0*	*45,0*	
60	58,5	61,5	56,0	37,0	50,0	
65	*63,5*	*66,5*	*61,0*	*37,0*	*55,0*	
70	68,5	71,5	61,0	42,0	60,0	
75	*73,5*	*76,5*	*70,0*	*42,0*	*60,0*	
80	78,5	81,5	70,0	47,0	70,0	50,0
90	*88,5*	*91,5*	*80,0*	*52,0*	*80,0*	*55,0*
100	98,5	101,5	80,0	57,0	80,0	60,0
110	*108,5*	*111,5*	*80,0*	*70,0*	*80,0*	*80,0*
120	118,5	121,5	80,0	70,0	80,0	80,0
130	*128,0*	*132,0*	*80,0*	*70,0*	*80,0*	*80,0*
140	138,0	142,0		80,0		80,0
150	*148,0*	*152,0*		*80,0*		*80,0*
160	158,0	162,0		80,0		80,0
180	*178,0*	*182,0*		*80,0*		*80,0*
200	198,0	202,0		80,0		80,0
to						
600	*597,0*	*602,0*		*80,0*		*80,0*

Intermediate lengths on Ls possible

Other thread lengths in the range ≥4xd1 to max. standard length permitted

Annex A35

SPAX®

Hex. Head with/without flange

Self-tapping screw with full and partial thread

Material: cold rolled wire according to SPAX - Factory standard

Screws of high carbon steel

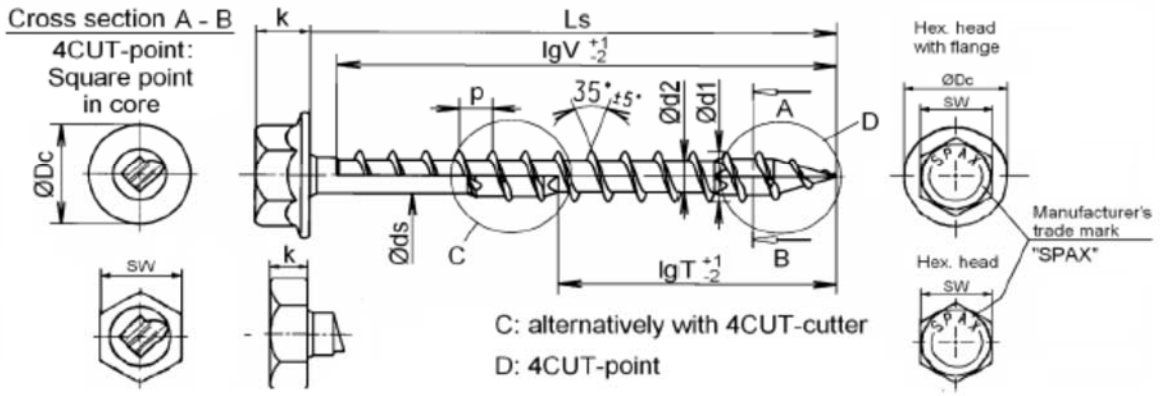

			with flange		without flange		with flange		without flange	
Nominal diameter			**8,0**		**8,0**		**10,0**			**10,0**
d1	thread size		8,1		8,1		10,0			10,0
	permissible tolerance		±0,40		±0,40		±0,40			±0,40
SW	wrench size		10		10		13			13
Dc	flange diameter		16,5		-		20,8			-
	permissible tolerance		±0,5		-		-1,00			-
d2	core diameter		5,0		5,0		6,1			6,1
	permissible tolerance		±0,20		±0,20		±0,20			±0,20
ds	shank diameter		5,70		5,70		6,80			6,80
	permissible tolerance		±0,25		±0,25		±0,25			±0,25
k	head height max.		4,4		4,4		9,7			7,0
p	thread pitch		4,8		4,8		6,0			6,0
	permissible tolerance		±0,1 x p		±0,1 x p		±0,1 x p			±0,1 x p
Ls			Standard thread lengths (full thread=lgV / partial thread = lgT)							
Nom.dim.	min	max	lgV	lgT						
40	38,5	41,5	32,0		32,0					
45	*43,5*	*46,5*	*37,0*		*37,0*					
50	48,5	51,5	42,0	32,0	42,0	32,0	40,0		40,0	
55	*53,5*	*56,5*	*47,0*	*32,0*	*47,0*	*32,0*	*45,0*		*45,0*	
60	58,5	61,5	52,0	37,0	52,0	37,0	50,0		50,0	
65	*63,5*	*66,5*	*57,0*	*37,0*	*57,0*	*37,0*	*55,0*		*55,0*	
70	68,5	71,5	61,0	42,0	61,0	42,0	60,0		60,0	
75	*73,5*	*76,5*	*61,0*	*42,0*	*61,0*	*42,0*	*60,0*		*60,0*	
80	78,5	81,5	70,0	47,0	70,0	47,0	70,0	50,0	70,0	50,0
90	*88,5*	*91,5*	*80,0*	*52,0*	*80,0*	*52,0*	*80,0*	*55,0*	*80,0*	*55,0*
100	98,5	101,5	80,0	57,0	80,0	57,0	80,0	60,0	80,0	60,0
110	*108,5*	*111,5*	*80,0*	*70,0*	*80,0*	*70,0*	*80,0*	*80,0*	*80,0*	*80,0*
120	118,5	121,5	80,0	70,0	80,0	70,0	80,0	80,0	80,0	80,0
130	*128,0*	*132,0*	*80,0*	*70,0*	*80,0*	*70,0*	*80,0*	*80,0*	*80,0*	*80,0*
140	138,0	142,0		80,0		80,0		80,0		80,0
150	*148,0*	*152,0*		*80,0*		*80,0*		*80,0*		*80,0*
160	158,0	162,0		80,0		80,0		80,0		80,0
180	*178,0*	*182,0*		*80,0*		*80,0*		*80,0*		*80,0*
200	198,0	202,0		80,0		80,0		80,0		80,0
to										
600	*597,0*	*602,0*		*80,0*		*80,0*		*80,0*		*80,0*

Intermediate lengths on Ls possible

Other thread lengths in the range ≥4xd1 to max. standard length permitted

Annex A36

SPAX®

Flat countersunk head

Self-tapping screw with full and partial thread

Material: cold rolled wire according to SPAX - Factory standard

Stainless steel screws

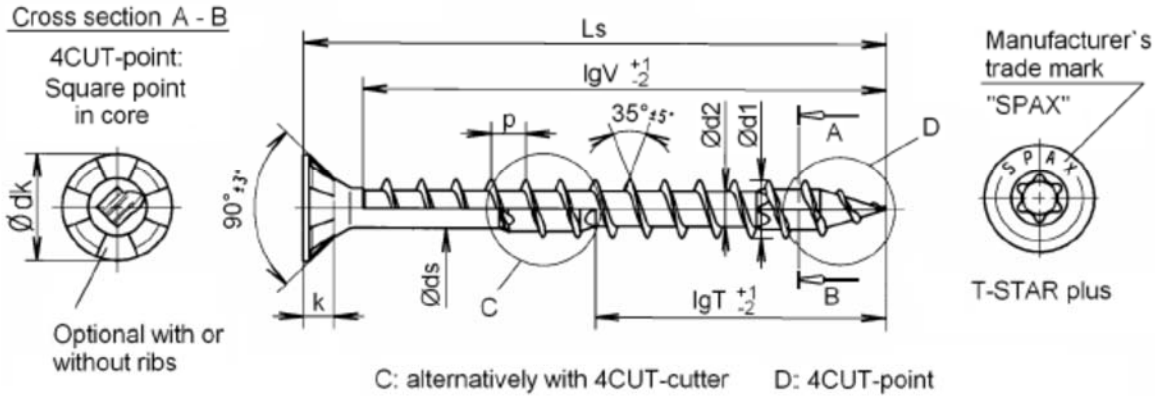

Nominal diameter		8,0	10,0
d1	thread size	8,1	10,0
	permissible tolerance	±0,40	±0,40
dk	head diameter	15,1	18,6
	permissible tolerance	-1,0	-1,0
d2	core diameter	5,3	6,1
	permissible tolerance	±0,20	±0,20
ds	shank diameter	5,70	6,80
	permissible tolerance	±0,25	±0,25
k	head height max.	4,4	6,0
p	thread pitch	4,8	6,0
	permissible tolerance	±0,1 x p	±0,1 x p
T-STAR plus size		T40	T50

Ls			Standard thread lengths (full thread=lgV / partial thread = lgT)													
Nom.dim.	min	max	lgV	lgT	lgV	lgT										
40	38,5	41,5	32,0													
45	*43,5*	*46,5*	*37,0*													
50	48,5	51,5	42,0	32,0	40,0											
55	*53,5*	*56,5*	*47,0*	*32,0*	*45,0*											
60	58,5	61,5	52,0	37,0	50,0											
65	*63,5*	*66,5*	*57,0*	*37,0*	*55,0*											
70	68,5	71,5	61,0	42,0	60,0											
75	*73,5*	*76,5*	*61,0*	*42,0*	*60,0*											
80	78,5	81,5	70,0	47,0	70,0	50,0										
90	*88,5*	*91,5*	*80,0*	*52,0*	*80,0*	*55,0*										
100	98,5	101,5	80,0	57,0	80,0	60,0										
110	*108,5*	*111,5*	*80,0*	*70,0*	*80,0*	*80,0*										
120	118,5	121,5	80,0	70,0	80,0	80,0										
130	*128,0*	*132,0*	*80,0*	*70,0*	*80,0*	*80,0*										
140	138,0	142,0		80,0		80,0										
150	*148,0*	*152,0*		*80,0*		*80,0*										
160	158,0	162,0		80,0		80,0										
180	*178,0*	*182,0*		*80,0*		*80,0*										
200	197,0	202,0		80,0		80,0										
to																
600	*597,0*	*602,0*		*80,0*		*80,0*										

Intermediate lengths on Ls possible

Other thread lengths in the range ≥4xd1
to max. standard length permitted

Annex A37

SPAX® Washer head

Self-tapping screw with full and partial thread

Material: cold rolled wire according to SPAX - Factory standard

Stainless steel screws

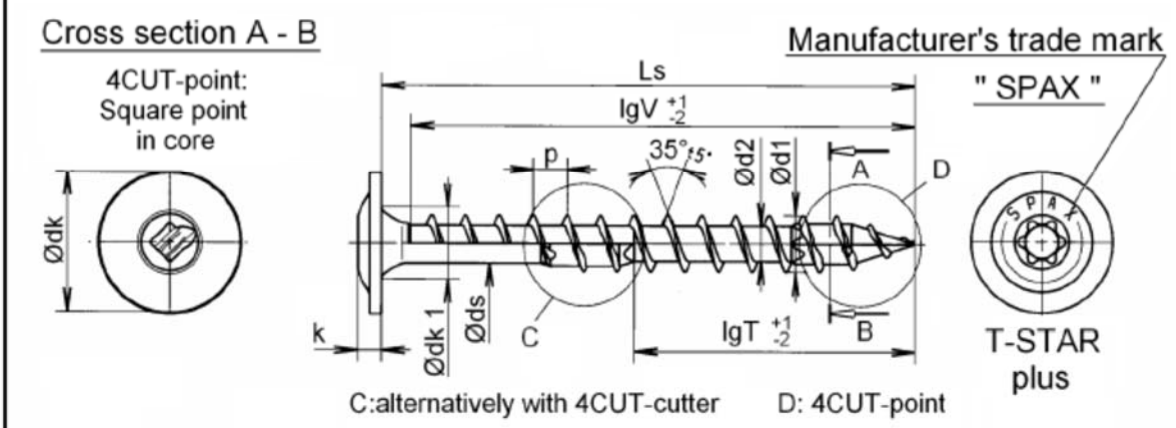

Nominal diameter		8,0				10,0		
d1	thread size	8,1				10,0		
	permissible tolerance	±0,40				±0,40		
dk	head diameter	18,0	20,0	22,0	24,0	23,0	25,0	27,0
	permissible tolerance	±0,9	±1,0			±1,0		
dk1	countersink diameter	9,00				12,00		
	permissible tolerance	+0,50				+0,5		
d2	core diameter	5,3				6,1		
	permissible tolerance	±0,20				±0,20		
ds	shank diameter	5,70				6,80		
	permissible tolerance	±0,25				±0,25		
k	head height max.	4,3				4,7		
p	thread pitch	4,8				6,0		
	permissible tolerance	±0,1 x p				±0,1 x p		
T-STAR plus size		T40				T50		

Ls			Standard thread lengths (full thread=lgV / partial thread = lgT)			
Nom.dim.	min	max	lgV	lgT	lgV	lgT
40	37,5	41,5	37,0			
45	*43,5*	*46,5*	*42,0*			
50	48,5	51,5	46,0	32,0	40,0	
55	*53,5*	*56,5*	*51,0*	*32,0*	*45,0*	
60	58,5	61,5	56,0	37,0	50,0	
65	*63,5*	*66,5*	*61,0*	*37,0*	*55,0*	
70	68,5	71,5	61,0	42,0	60,0	
75	*73,5*	*76,5*	*70,0*	*42,0*	*70,0*	
80	78,5	81,5	70,0	47,0	80,0	50,0
90	*88,5*	*91,5*	*80,0*	*52,0*	*80,0*	*55,0*
100	98,5	101,5	80,0	57,0	80,0	60,0
110	*108,5*	*111,5*	*80,0*	*70,0*	*80,0*	*80,0*
120	118,5	121,5	80,0	70,0	80,0	80,0
130	*128,0*	*132,0*	*80,0*	*70,0*	*80,0*	*80,0*
140	138,0	142,0		80,0		80,0
150	*148,0*	*152,0*		*80,0*		*80,0*
160	158,0	162,0		80,0		80,0
180	*178,0*	*182,0*		*80,0*		*80,0*
200	197,0	202,0		80,0		80,0
to						
600	*597,0*	*602,0*		*80,0*		*80,0*

Intermediate lengths on Ls possible

☐ = Preferred size

Other thread lengths in the range ≥4xd1 to max. standard length permitted

Annex A38

SPAX®

Raised coutersunk head

Self-tapping screw with full and partial thread

Material: cold rolled wire according to SPAX - Factory standard

Stainless steel screws

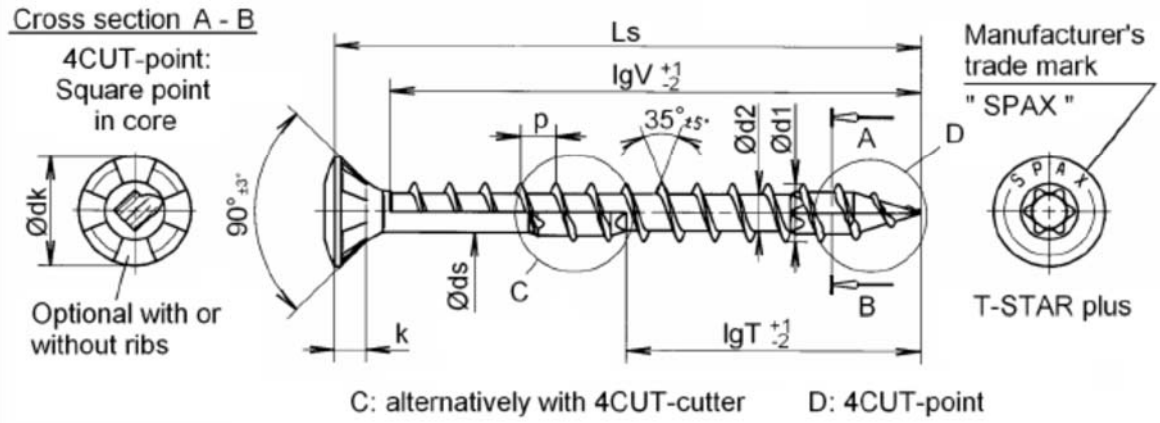

Nominal diameter		8,0	10,0
d1	thread size	8,1	10,0
	permissible tolerance	±0,40	±0,40
dk	head diameter	15,1	18,6
	permissible tolerance	-1,0	-1,0
d2	core diameter	5,3	6,1
	permissible tolerance	±0,20	±0,20
ds	shank diameter	5,70	6,80
	permissible tolerance	±0,25	±0,25
k	head height max.	4,4	6,0
p	thread pitch	4,8	6,0
	permissible tolerance	±0,1 x p	±0,1 x p
T-STAR plus size		T40	T50

Ls			Standard thread lengths (full thread=lgV / partial thread = lgT)			
Nom.dim.	min	max	lgV	lgT	lgV	lgT
40	38,5	41,5	32,0			
45	*43,5*	*46,5*	*37,0*			
50	48,5	51,5	42,0	32,0	40,0	
55	*53,5*	*56,5*	*47,0*	*32,0*	*45,0*	
60	58,5	61,5	52,0	37,0	50,0	
65	*63,5*	*66,5*	*57,0*	*37,0*	*55,0*	
70	68,5	71,5	61,0	42,0	60,0	
75	*73,5*	*76,5*	*61,0*	*42,0*	*60,0*	
80	78,5	81,5	70,0	47,0	70,0	50,0
90	*88,5*	*91,5*	*80,0*	*52,0*	*80,0*	*55,0*
100	98,5	101,5	80,0	57,0	80,0	60,0
110	*108,5*	*111,5*	*80,0*	*70,0*	*80,0*	*80,0*
120	118,5	121,5	80,0	70,0	80,0	80,0
130	*128,0*	*132,0*	*80,0*	*70,0*	*80,0*	*80,0*
140	138,0	142,0		80,0		80,0
150	*148,0*	*152,0*		*80,0*		*80,0*
160	158,0	162,0		80,0		80,0
180	*178,0*	*182,0*		*80,0*		*80,0*
200	*198,0*	*202,0*		80,0		80,0
to						
600	*597,0*	*602,0*		*80,0*		*80,0*

Intermediate lengths on Ls possible

Other thread lengths in the range ≥4xd1 to max. standard length permitted

Annex A39

SPAX®
Pan head

Self-tapping screw with full and partial thread

Material: cold rolled wire according to SPAX - Factory standard

Stainless steel screws

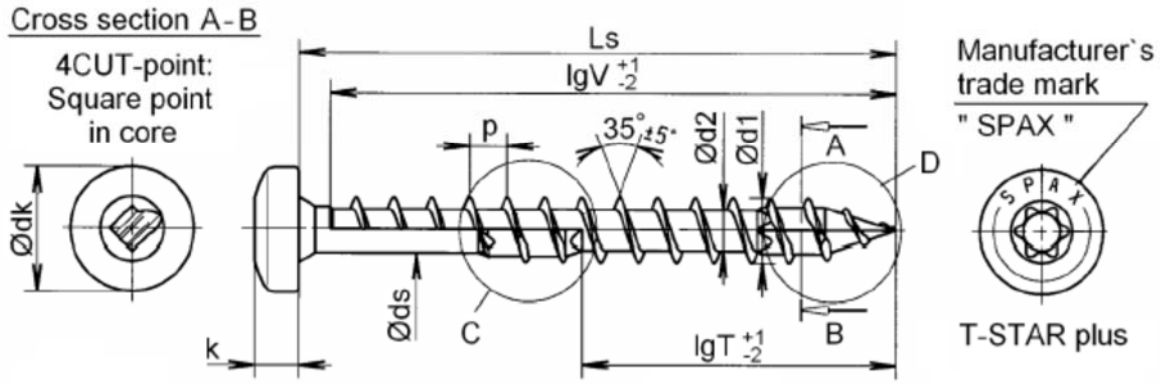

C: alternatively with 4CUT-cutter D: 4CUT-point

Nominal diameter		8,0	10,0
d1	thread size	8,1	10,0
	permissible tolerance	±0,40	±0,40
dk	head diameter	15,5	19,0
	permissible tolerance	-1,0	-1,0
d2	core diameter	5,3	6,1
	permissible tolerance	±0,20	±0,20
ds	shamk diameter	5,70	6,80
	permissible tolerance	±0,25	±0,25
k	head height max.	6,0	7,1
p	thread pitch	4,8	6,0
	permissible tolerance	±0,1 x p	±0,1 x p
T-STAR plus size		T40	T50

Ls			Standard thread lengths (full thread=lgV / partial thread = lgT)			
Nom.dim.	min	max	lgV	lgT	lgV	lgT
40	38,5	41,5	37,0			
45	*43,5*	*46,5*	*42,0*			
50	48,5	51,5	46,0	32,0	40,0	
55	*53,5*	*56,5*	*51,0*	*32,0*	*45,0*	
60	58,5	61,5	56,0	37,0	50,0	
65	*63,5*	*66,5*	*61,0*	*37,0*	*55,0*	
70	68,5	71,5	61,0	42,0	60,0	
75	*73,5*	*76,5*	*70,0*	*42,0*	*60,0*	
80	78,5	81,5	70,0	47,0	70,0	50,0
90	*88,5*	*91,5*	*80,0*	*52,0*	*80,0*	*55,0*
100	98,5	101,5	80,0	57,0	80,0	60,0
110	*108,5*	*111,5*	*80,0*	*70,0*	*80,0*	*80,0*
120	118,5	121,5	80,0	70,0	80,0	80,0
130	*128,0*	*132,0*	*80,0*	*70,0*	*80,0*	*80,0*
140	138,0	142,0		80,0		80,0
150	*148,0*	*152,0*		*80,0*		*80,0*
160	158,0	162,0		80,0		80,0
180	*178,0*	*182,0*		*80,0*		*80,0*
200	198,0	202,0		80,0		80,0
to						
600	*597,0*	*202,0*		*80,0*		*80,0*

Intermediate lengths on Ls possible

Other thread lengths in the range ≥4xd1 to max. standard length permitted

Annex A40

SPAX®-S

Self-tapping screw with full- thread

Material: Cold rolled wire according to SPAX - Factory Standard

Screws of high-carbon steel

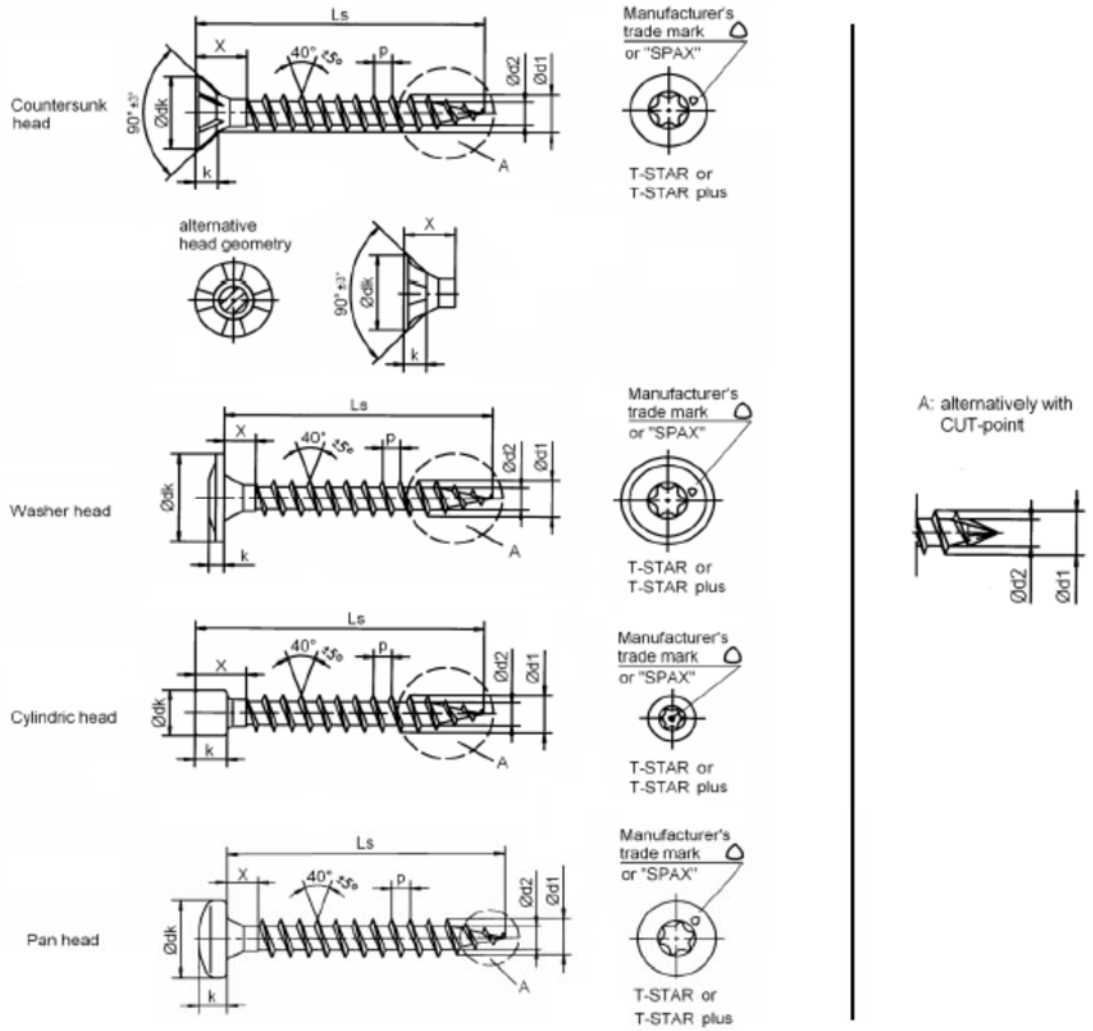

Nominal diameter		6,0						
Type of Head		**Countersunk head**		**Washer head**		**Cylindric head**	**Pan head**	
d1	thread size	6,0						
	permissible tolerance	±0,20						
dk	head diameter	9,7	11,6	13,0	15,0	8,4	9,9	11,9
	permissible tolerance	-0,60		±1,0		-0,60		
d2	core diameter	3,8						
	permissible tolerance	-0,30						
k	head height max.	2,9	3,8	2,2	2,4	6,0	3,4	4
p	thread pitch	3,0						
	permissible tolerance	±0,1 x p						
T-STAR size		T20	T30				T20	T30
Thread-free length X	Ls 60-200	max. 15 mm						
permissible tolerance of screw length	Ls 60-99	Ls ±2 mm						
	Ls 100-200	Ls ±5 mm						

☐ =Preferred Version

Annex A41

SPAX®

Self-tapping screw with full- thread

Material: Cold rolled wire according to SPAX - Factory Standard
Screws of high-carbon steel

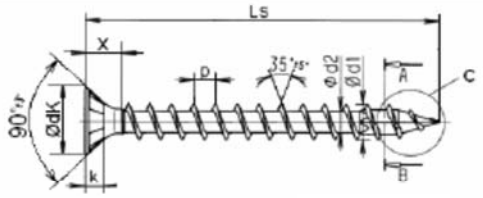

C: 4CUT-point

Manufacurer's trade mark "SPAX"

T-STAR plus

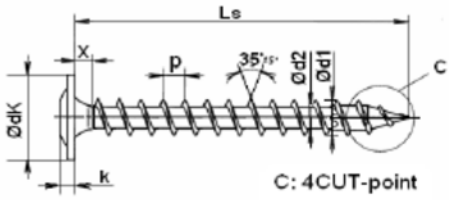

C: 4CUT-point

Manufacurer's trade mark "SPAX"

T-STAR plus

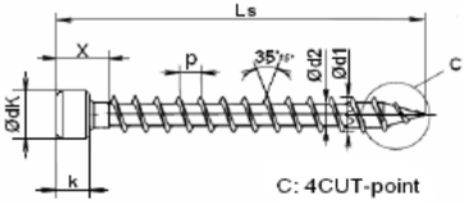

C: 4CUT-point

T-STAR plus

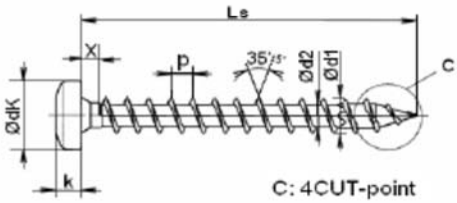

C: 4CUT-point

Manufacurer's trade mark "SPAX"

T-STAR plus

Cross section A-B

4CUT-point:
Square point
in core

Nominal diameter		6,0						
Type of Head		Countersunk head		Washer head		Cylindric head	Pan head	
d1	thread size	6,0						
	permissible tolerance	+0,3/-0,2						
dk	head diameter	9,7	11,6	13,0	15,0	8,4	9,9	11,9
	permissible tolerance	-0,60		±1,0		-0,60		
d2	core diameter	3,9						
	permissible tolerance	+0,2/-0,3						
k	head height max.	2,9	3,8	2,2	2,4	6,0	3,4	4
p	thread pitch	3,6						
	permissible tolerance	±0,1 x p						
T-STAR plus size		T20	T30				T20	T30
Thread-free length X	Ls 60-200	max. 15 mm						
permissible tolerance of screw length	Ls 60-99	Ls ±2 mm						
	Ls 100-200	Ls ±5 mm						

☐ =Preferred Version

Annex A42

SPAX®-S

Self-tapping screw with full- thread

Material: Cold rolled wire according to SPAX - Factory Standard

Screws of high-carbon steel

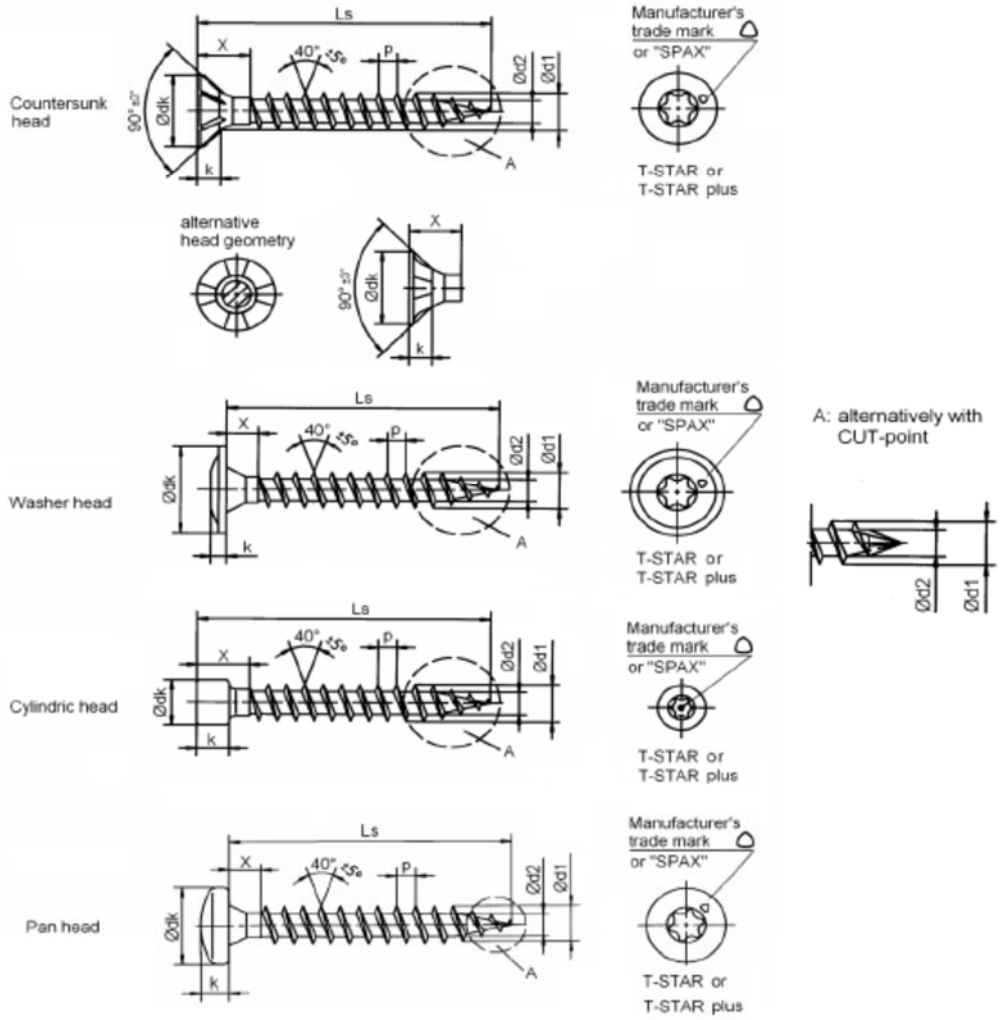

Nominal diameter		8,0								
Type of Head		Countersunk head		Washer head				Cylindric head	Pan head	
d1	thread size	8,1								
	permissible tolerance	±0,40								
dk	head diameter	11,6	15,1	18,0	20,0	22,0	24,0	10,0	15,5	11,9
	permissible tolerance	-0,60		±1,0				-0,60		
d2	core diameter	5,0								
	permissible tolerance	-0,30								
k	head height max.	3,0	4,8	4,5				8,0	5,8	4,0
p	thread pitch	4,0								
	permissible tolerance	±0,1 x p								
T - STAR size		T40								T30
Thread-free length X	Ls 60-200	max. 15 mm								
	Ls > 200	max. 25mm								
permissible tolerance of screw length	Ls 60-99	Ls ±2 mm								
	Ls 100-200	Ls ±5 mm								
	Ls > 200	Ls ±15 mm								

Screw lengths Ls up to 600 mm (Lengths > 400 mm with CUT-point) ▭ =Preferred size

Annex A43

SPAX®-S

Self-tapping screw with full- thread

Material: Cold rolled wire according to SPAX - Factory Standard

Screws of high-carbon steel

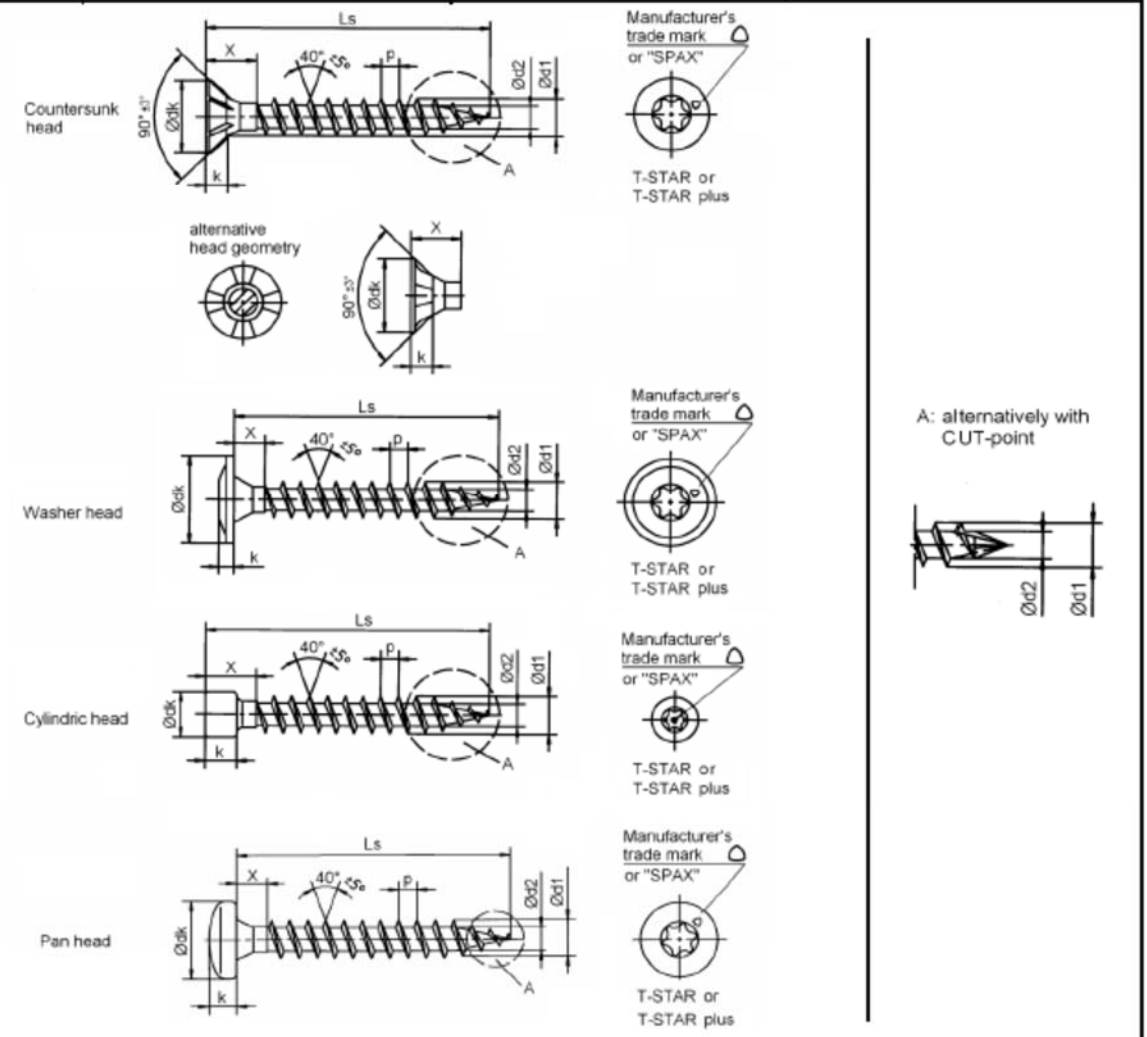

Nominal diameter		10,0						
Type of Head		**Countersunk head**		**Washer head**		**Cylindric head**	**Pan head**	
d1	thread size	10,0						
	permissible tolerance	±0,40						
dk	head diameter	15,1	18,6	20,0	25,0	12,0	19,0	15,5
	permissible tolerance	-0,60		±1,0		-0,60		
d2	core diameter	6,1						
	permissible tolerance	-0,30						
k	head height max.	4,2	6,0	5,0	5,0	10,0	7,1	5,8
p	thread pitch	5,0						
	permissible tolerance	±0,1 x p						
T - STAR size		T50		T40		T50		T40
Thread-free length X	Ls 60-200	max. 15 mm						
	Ls > 200	max. 25 mm						
permissible tolerance of screw length	Ls 60-99	Ls ±2 mm						
	Ls 100-200	Ls ±5 mm						
	Ls > 200	Ls ±15 mm						

Screw lengths Ls to 800 mm possible

☐ = Preferred size

Annex A44

SPAX®-S

Self-tapping screw with full- thread

Material: Cold rolled wire according to SPAX - Factory Standard

Screws of high-carbon steel

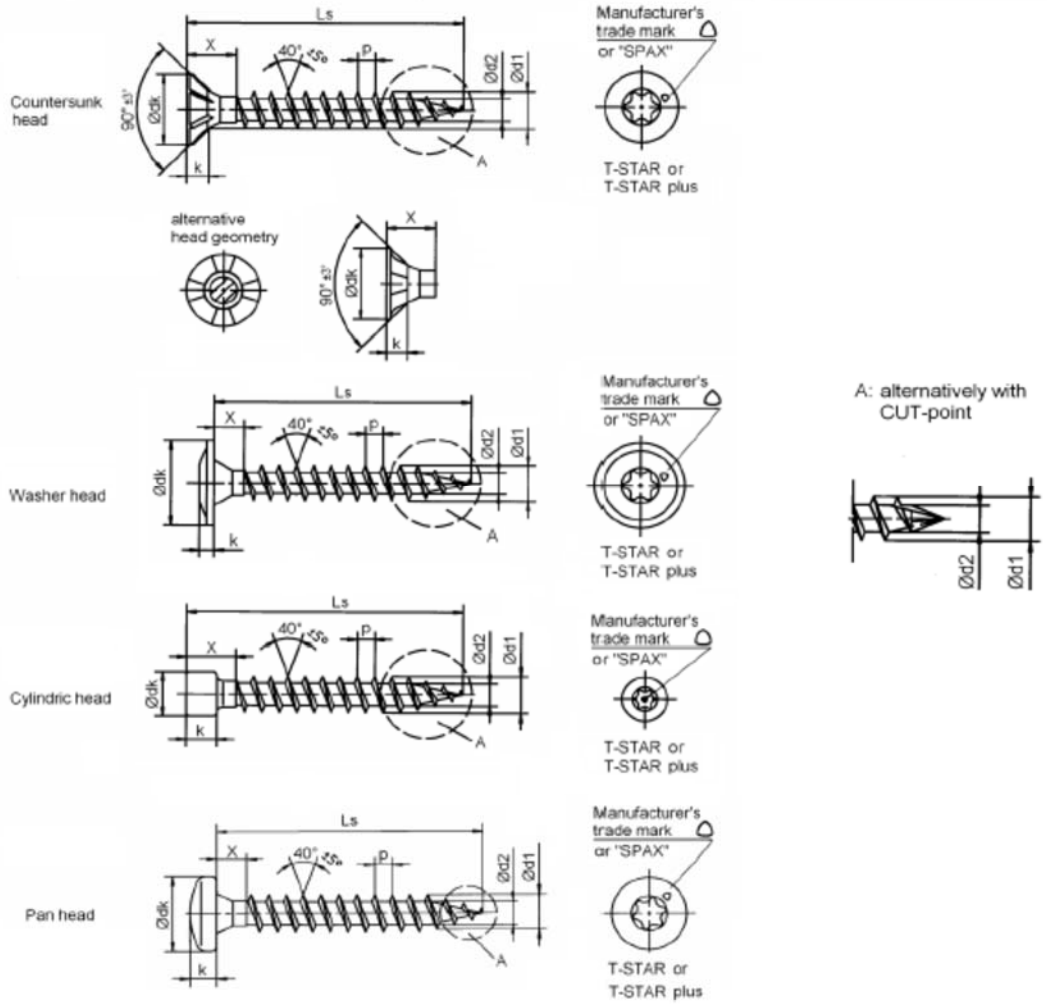

Nominal diameter		12,0						
Type of Head		**Countersunk head**		**Washer head**		**Cylindric head**	**Pan head**	
d1	thread size	12,0						
	permissible tolerance	±0,40						
dk	head diameter	18,6	22,6	25,0	29,0	14,0	23,0	19,0
	permissible tolerance	-0,60		±1,0		-0,60		
d2	core diameter	7,3						
	permissible tolerance	±0,3						
k	head height max.	5,2	7,1	6,0		12,0	8,5	7,1
p	thread pitch	6,0						
	permissible tolerance	±0,1 x p						
T - STAR	size	T50						
Thread-free length X	Ls 60-99	max. 15 mm						
	Ls 100-200	max. 20 mm						
	Ls > 200	max. 25 mm						
permissible tolerance of screw length	Ls 60-99	Ls ±2 mm						
	Ls 100-200	Ls ±10 mm						
	Ls > 200	Ls ±15 mm						

Screw lengths Ls to 600 mm possible

☐ =Preferred size

Annex A45

SPAX®

Self-tapping screw with full- thread

Material: Cold rolled wire according to SPAX - Factory Standard
Stainless steel screws

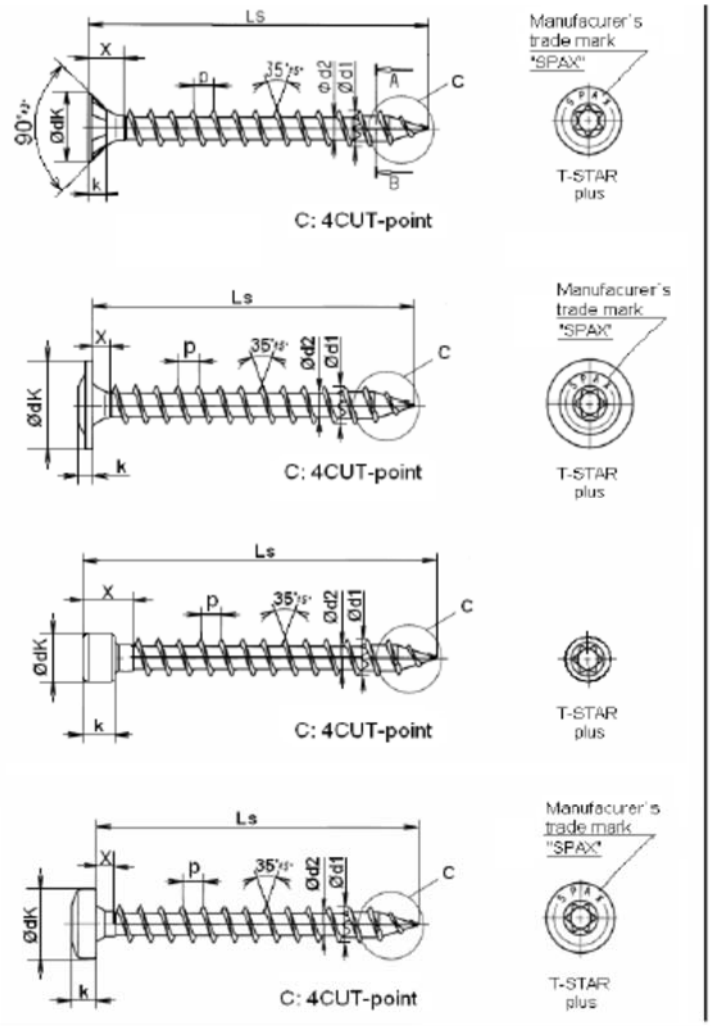

Cross selektion A-B

4CUT-point: Square point in core

Nominal diameter		6,0						
Type of Head		Countersunk head		Washer head		Cylindric head	Pan head	
d1	thread size	6,1						
	permissible tolerance	±0,25						
dk	head diameter	9,7	11,6	13,0	15,0	8,4	11,9	9,9
	permissible tolerance	-0,60		±1,0		-0,60		
d2	core diameter	4,0						
	permissible tolerance	+0,1/-0,3						
k	head height max.	2,9	3,8	2,2	2,4	6,0	4,0	3,4
p	thread pitch	3,6						
	permissible tolerance	±0,1 x p						
T-STAR plus size		T30						T20
Thread-free length X	Ls 60-200	max. 15 mm						
permissible tolerance of screw length	Ls 60-99	Ls ±2 mm						
	Ls 100-200	Ls ±5 mm						

☐ =Preferred Version

Annex A46

SPAX®-S

Self-tapping screw with full- thread

Material: Cold rolled wire according to SPAX Factory - Standard

Stainless steel screws

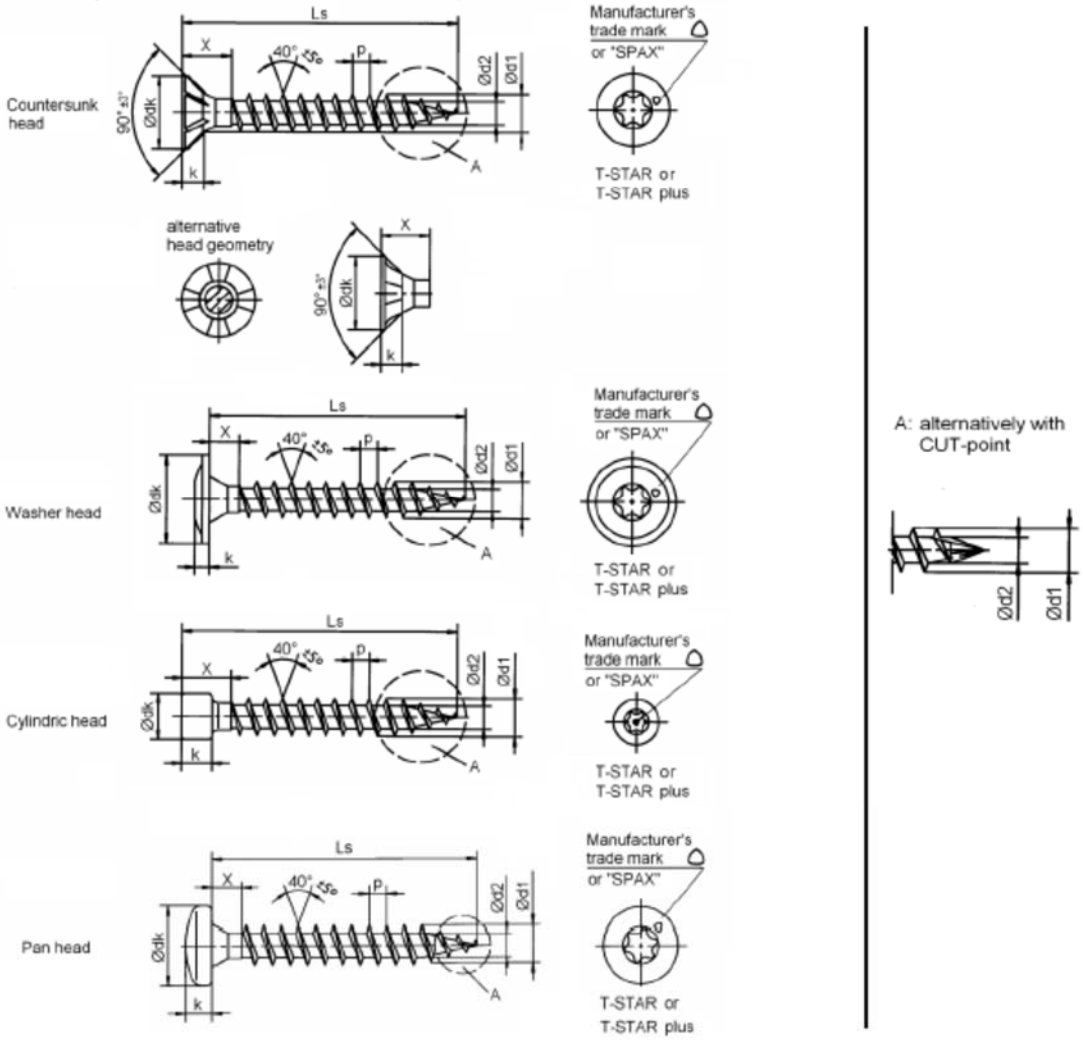

Nominal diameter		8,0								
Type of Head		**Countersunk head**		**Washer head**				**Cylindric head**	**Pan head**	
d1	thread size	8,1								
	permissible tolerance	±0,40								
dk	head diameter	11,6	15,1	18,0	20,0	22,0	24,0	10,0	15,5	11,9
	permissible tolerance	±1,0								
d2	core diameter	5,0								
	permissible tolerance	-0,30								
k	head height max.	3,0	4,8	4,5				8,0	5,8	4,0
p	thread pitch	4,0								
	permissible tolerance	±0,1 x p								
T - STAR	size	T40								T30
Thread-free length X	Ls 60-200	max. 15 mm								
	Ls > 200	max. 25 mm								
permissible tolerance of screw length	Ls 60-99	Ls ±2 mm								
	Ls 100-200	Ls ±5 mm								
	Ls > 200	Ls ±15 mm								

Screw lengths Ls up to 600 mm (Lengths > 400 mm with CUT-point) ▭ =Preferred size

Annex A47

SPAX®-S

Self-tapping screw with full- thread

Material: Cold rolled wire according to SPAX - Factory Standard
Stainless steel screws

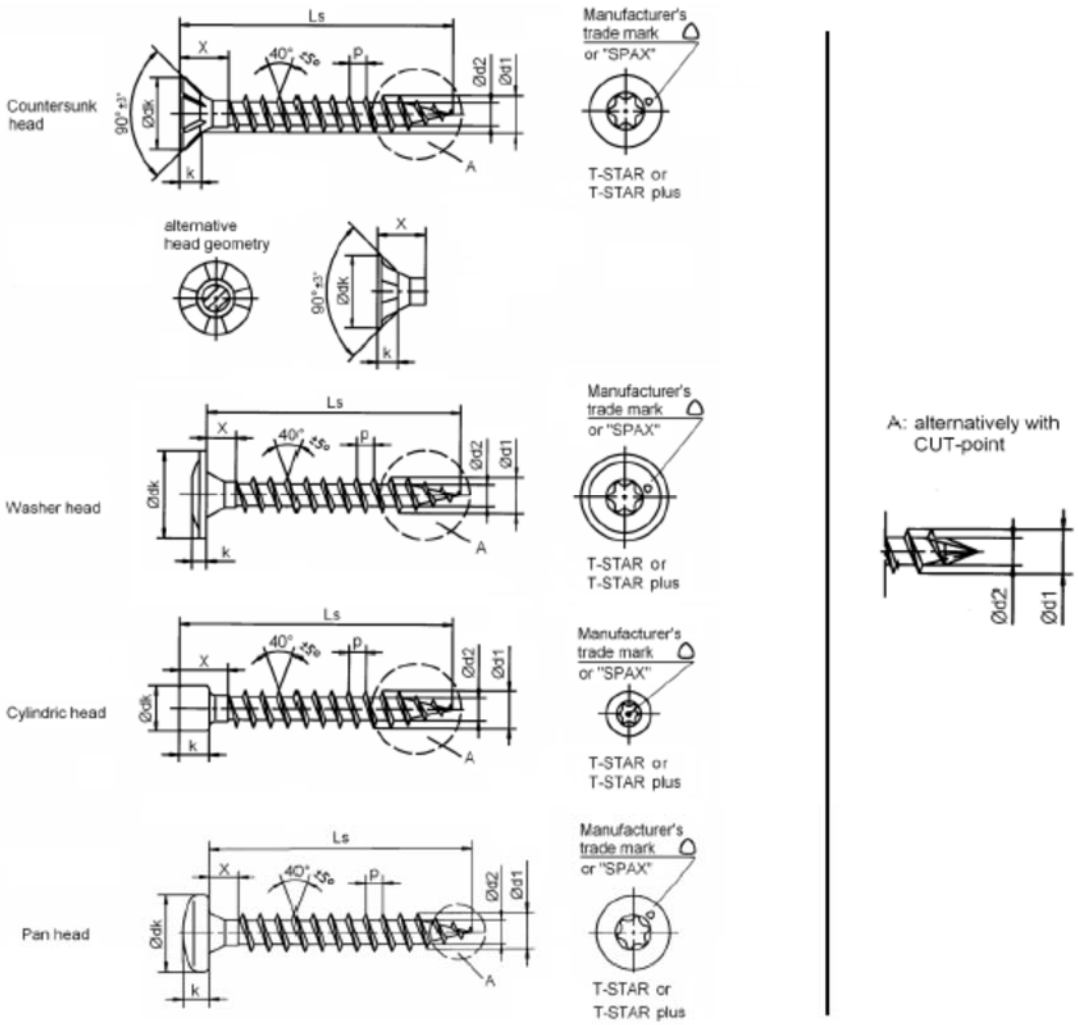

Nominal diameter		10,0						
Type of Head		**Countersunk head**		**Washer head**		**Cylindric head**	**Pan head**	
d1	thread size	10,0						
	permissible tolerance	±0,40						
dk	head diameter	15,1	18,6	20,0	25,0	12,0	19,0	15,5
	permissible tolerance	±1,0						
d2	core diameter	6,1						
	permissible tolerance	-0,30						
k	head height max.	4,2	6,0	5,0	5,0	10,0	7,1	5,8
p	thread pitch	5,0						
	permissible tolerance	±0,1 x p						
T - STAR	size	T50		T40		T50		T40
Thread-free length X	Ls 60-200	max. 15 mm						
	Ls > 200	max. 25 mm						
permissible tolerance of screw length	Ls 60-99	Ls ±2 mm						
	Ls 100-200	Ls ±5 mm						
	Ls > 200	Ls ±15 mm						

Screw lengths Ls to 800 mm possible

▭ = Preferred size

Annex A48

SPAX®-S

Self-tapping screw with full- thread

Material: Cold rolled wire according to SPAX - Factory Standard

Stainless steel screws

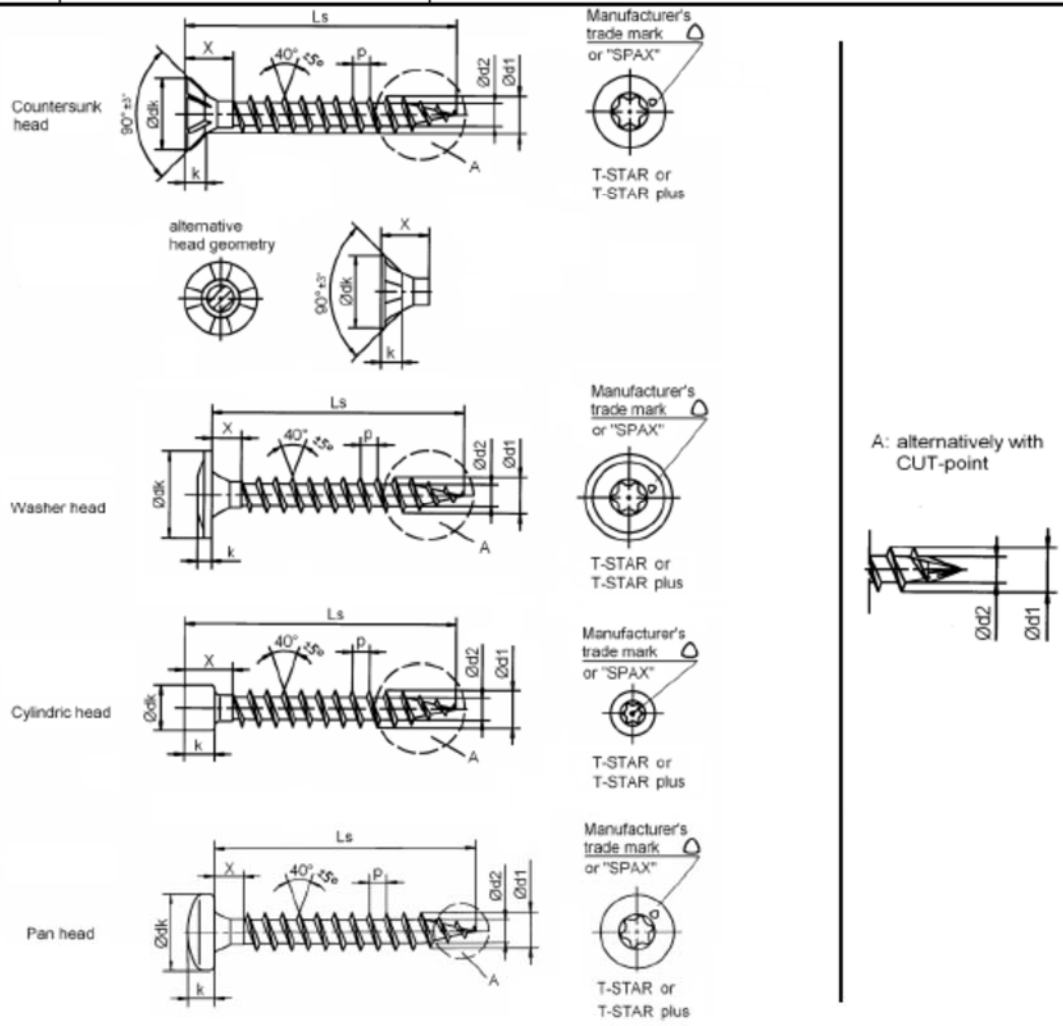

Nominal diameter		12,0						
Type pf Head		Countersunk head		Washer head		Cylindric head	Pan head	
d1	thread size	12,0						
	permissible tolerance	±0,40						
dk	head diameter	18,6	22,6	25,0	29,0	14,0	23,0	19,0
	permissible tolerance	±1,0						
d2	core diameter	7,3						
	permissible tolerance	±0,3						
k	head height max.	5,2	7,1	6,0		12,0	8,5	7,1
p	thread pitch	6,0						
	permissible tolerance	±0,1 x p						
T - STAR	size	T50						
Thread-free length X	Ls 60-99	max. 15 mm						
	Ls 100-200	max. 20 mm						
	Ls > 200	max. 25 mm						
permissible tolerance of screw length	Ls 60-99	Ls ±2 mm						
	Ls 100-200	Ls ±10 mm						
	Ls > 200	Ls ±15 mm						

Screw lengths Ls to 600 mm possible

[ ] =Preferred size

Annex A49

SPAX®-S

Hex. head with/without flange

Self-tapping screw with full- thread

Material: Cold rolled wire according to SPAX - Factory Standard

Screws of high-carbon steel

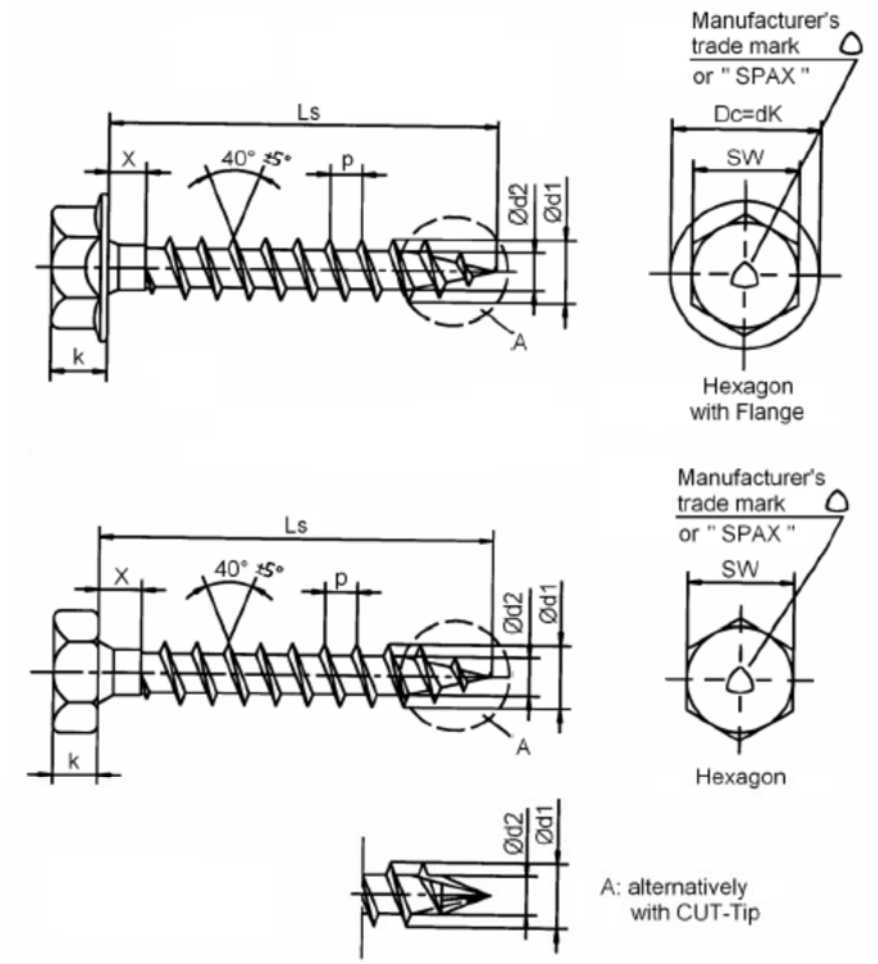

Nominal diameter		8,0		10,0		12,0	
Type of Head		without flange	with flange	without flange	with flange	without flange	with flange
SW	wrench size	10		13		16	
k	head height max.	6,00	8,5	7,00	9,7	8,00	12,1
Dc	diameter of flange		15,5		19,5		22,5
	permissible tolerance	±1					
d1	thread diameter	8,1		10,0		12,0	
	permissible tolerance	±0,40					
d2	core diameter	5,0		6,1		7,3	
	permissible tolerance	-0,30				±0,3	
p	thread pitch	4,0		5,0		6,0	
	permissible tolerance	±0,1 x p					
thread-free length X	Ls 60-99	max. 15 mm		max. 15 mm		max. 15 mm	
	Ls 100-200					max. 20 mm	
	Ls > 200	max. 25 mm		max. 25 mm		max. 25 mm	
permissible tolerance of screw length	Ls 60-99	Ls ±2 mm				Ls ±2 mm	
	Ls 100-200	Ls ±5 mm				Ls ±10 mm	
	Ls > 200	Ls ±15 mm				Ls ±15 mm	

Screw lengths Ls up to 600 mm possible (at a nominal diameter of 8,0 mm lengths > 400 mm with CUT-point)

Annex A50

	SPAX® Washer	Washer for screws with countersunk and raised countersunk head Material: machining steel Dimensions in mm

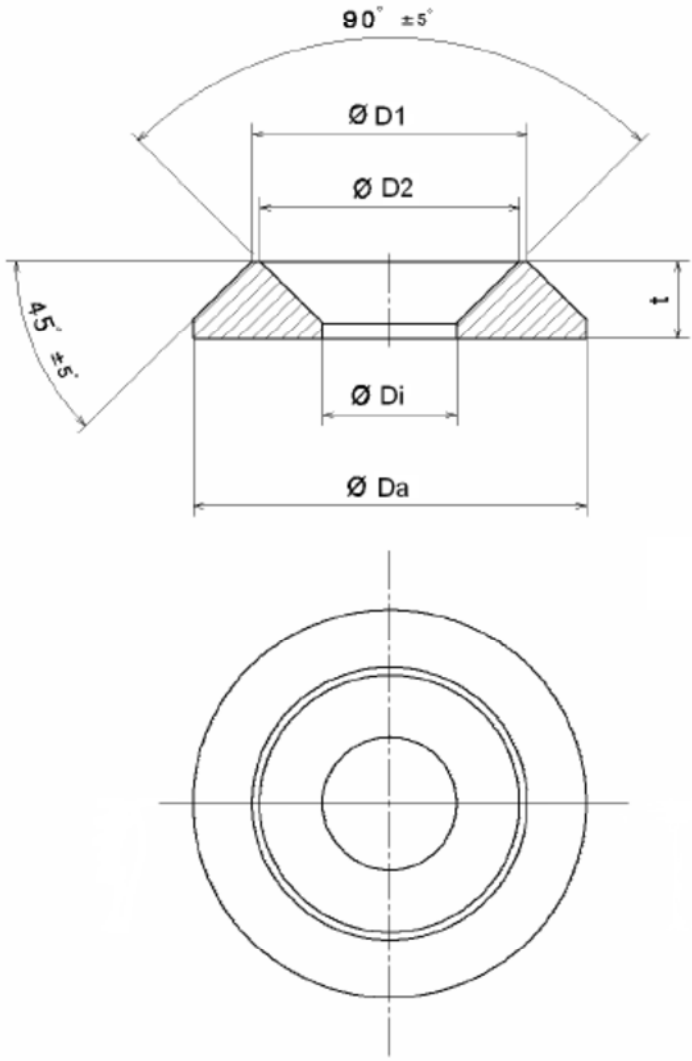

Thread size	6,0	8,0	10,0	12,0	Tolerance
ØDa	18,0	25,0	32,0	40,0	± 0,3
ØDi	6,5	8,5	11,0	13,0	
ØD1	13,5	17,5	22,5	27,0	
ØD2	12,5	16,5	21,5	26,0	
t	3,5	5,0	5,6	7,0	

Annex A51

SPAX®

Threaded rod with full thread

Material: Steel or Stainless steel

Design with hexagon head

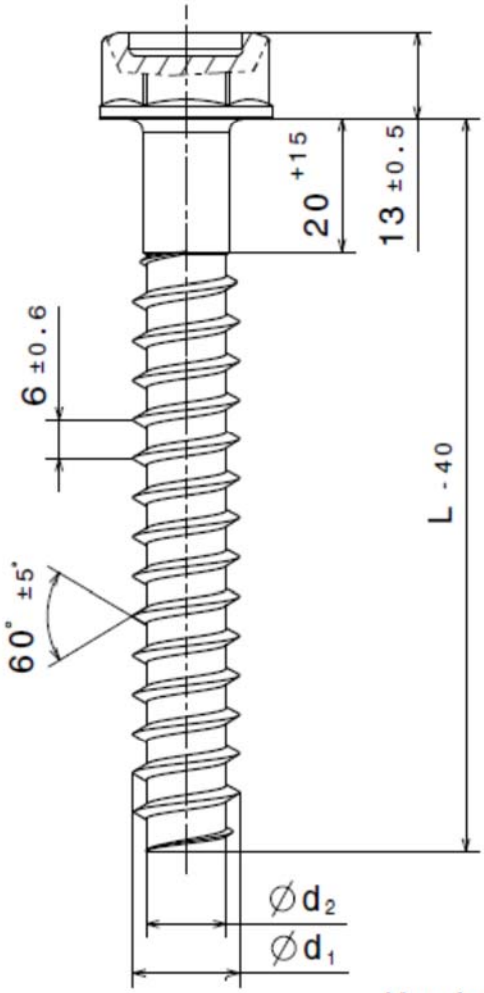

L
800
1000
1200
1400
1600
1800
2000
2200

Manufacturer's trade mark:
ABC or SPAX

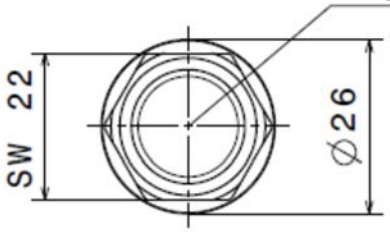

stainless steel	$16^{+0,2}_{-0,7}$	$12^{+0,2}_{-0,5}$
Steel	$16^{+0,2}_{-0,7}$	$12^{+0,2}_{-0,4}$
Execution	Ø d_1	Ø d_2

- Other lengths 100 - 3000 mm possible
- Length can be changed by cutting the threaded part

SPAX®

Threaded rod with full thread

Material: steel or stainless steel

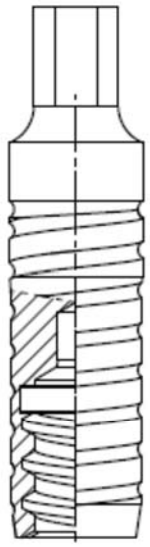

Screw adapter
available as accessory

Version without head

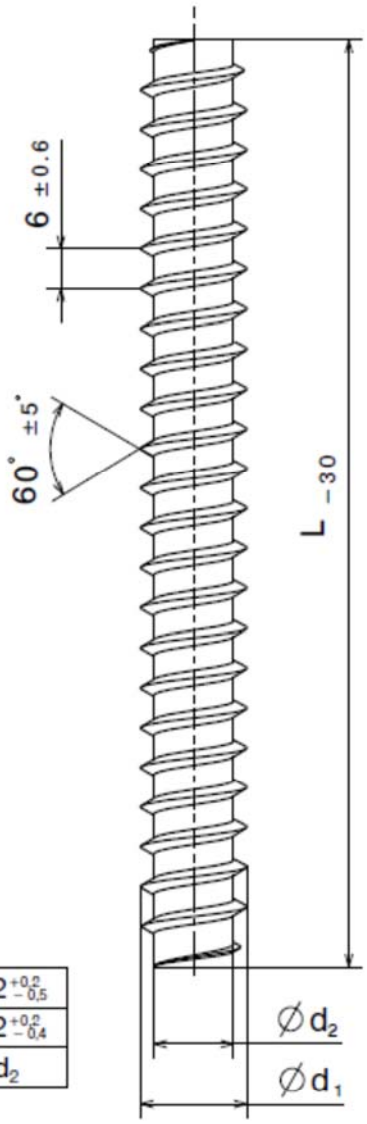

L
3000

stainless steel	$16^{+0,2}_{-0,7}$	$12^{+0,2}_{-0,5}$
Steel	$16^{+0,2}_{-0,7}$	$12^{+0,2}_{-0,4}$
Execution	Ø d_1	Ø d_2

– Other lengths 100 – 3000 mm possible
– Length can be changed by cutting the threaded part

SPAX®

Self-tapping screw with CUT-point

Material: cold rolled wire according to SPAX - Factory Standard
Screws of high carbon steel

Screw with CUT-point

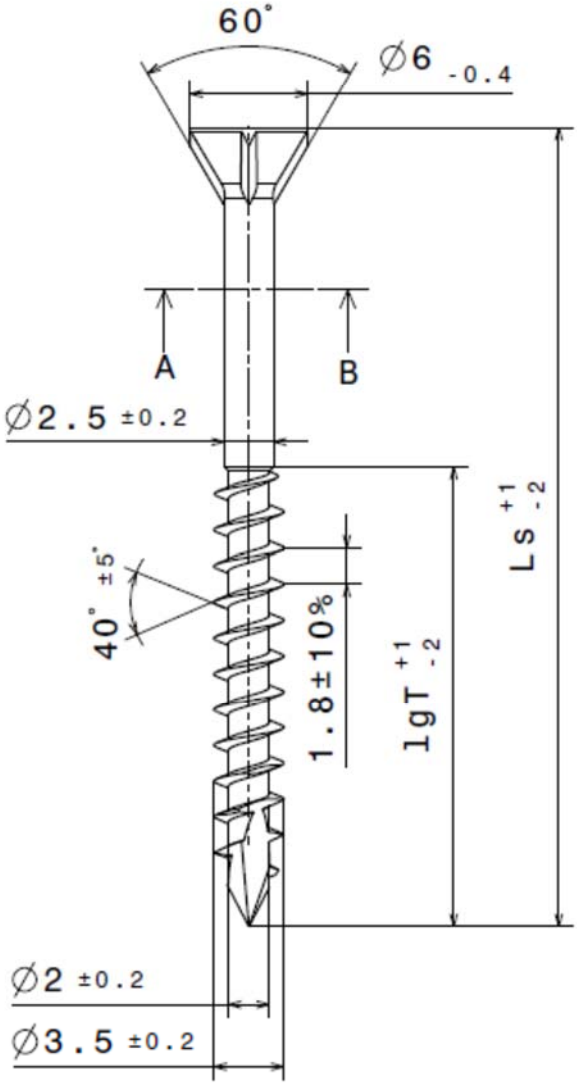

Cross section A-B

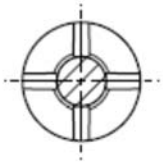

55	35
45	28
35	20
Ls	lgT*

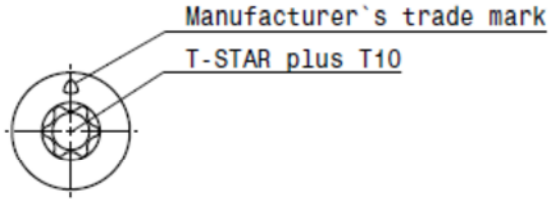

*other thread lengths (lgT)
are acceptable if
lgT > 4 x 3,5

Annex A54

SPAX®

Self-tapping flat countersunk head screw with CUT-point

Material: cold rolled wire according to SPAX - Factory Standard
Screws of high carbon steel

Screw with CUT-point

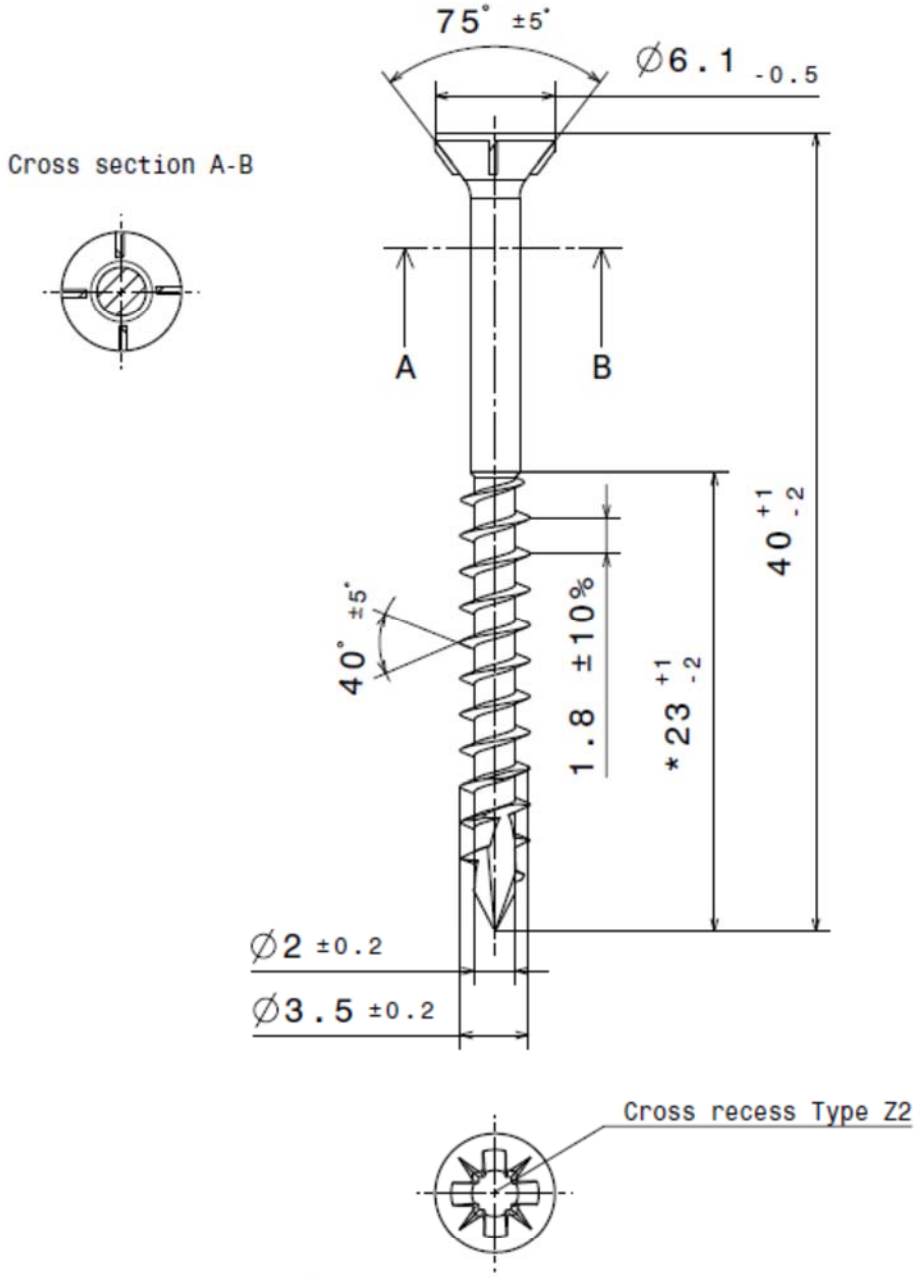

*other thread lengths (lgT)
are acceptable if
lgT > 4 x 3,5

Annex A55

SPAX®

Self-tapping flat countersunk head screw with fixing thread

Material: cold rolled wire according to SPAX - Factory Standard
Screws of high carbon steel

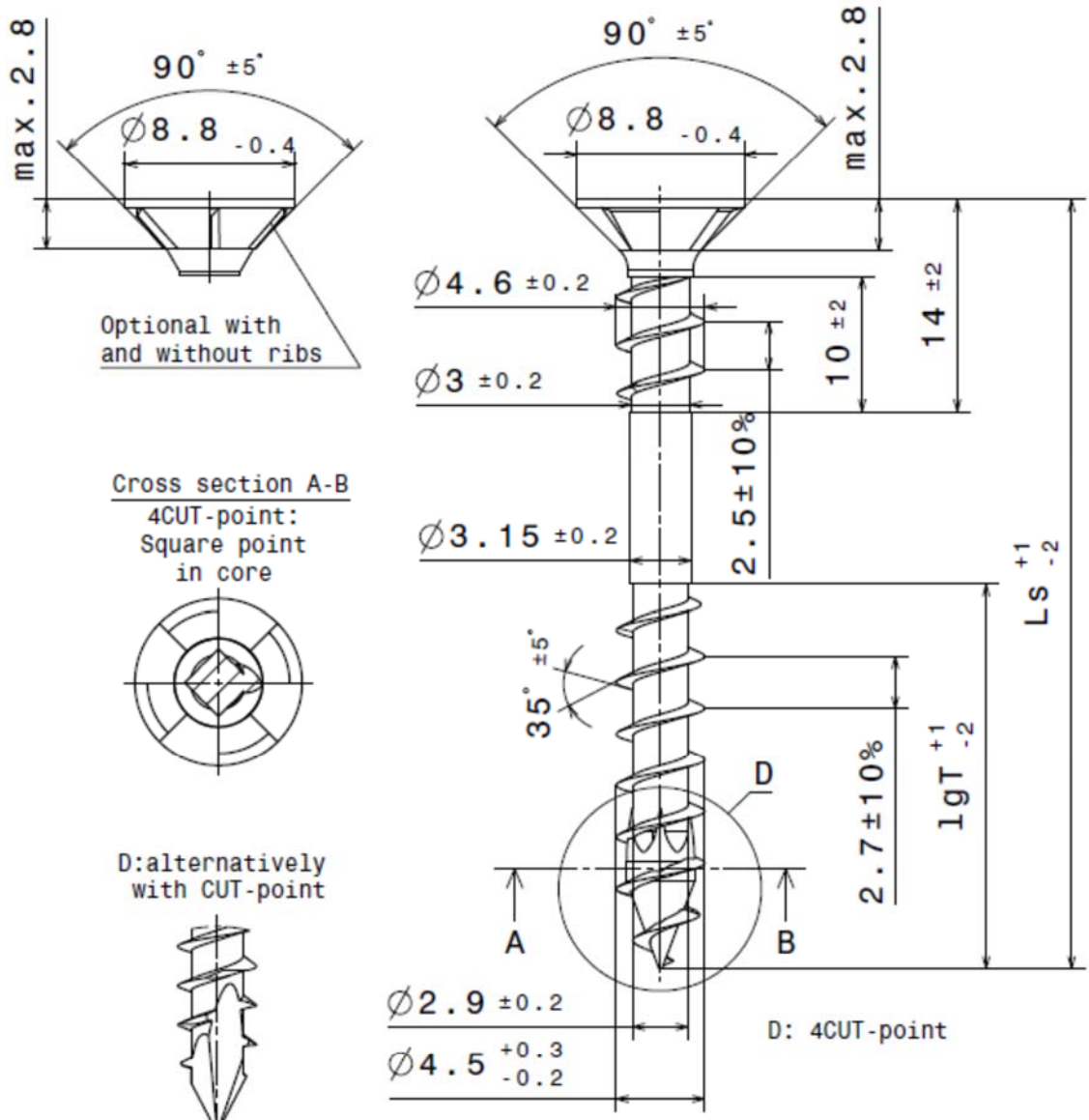

Cross section A-B
4CUT-point:
Square point
in core

D:alternatively
with CUT-point

80	31
70	31
60	26
50	21
Ls	lgT*

*other thread lengths (lgT)
are acceptable if
lgT > 4 x Ø4,5

Manufacturer`s trade mark
"SPAX"

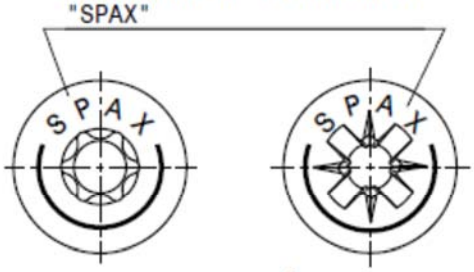

T-STAR plus
T20

Cross recess
Typ Z 2

Annex A56

SPAX®

Self-tapping raised countersunk head screw with fixing thread

Material: cold rolled wire according to SPAX - Factory Standard
Screws of high carbon steel

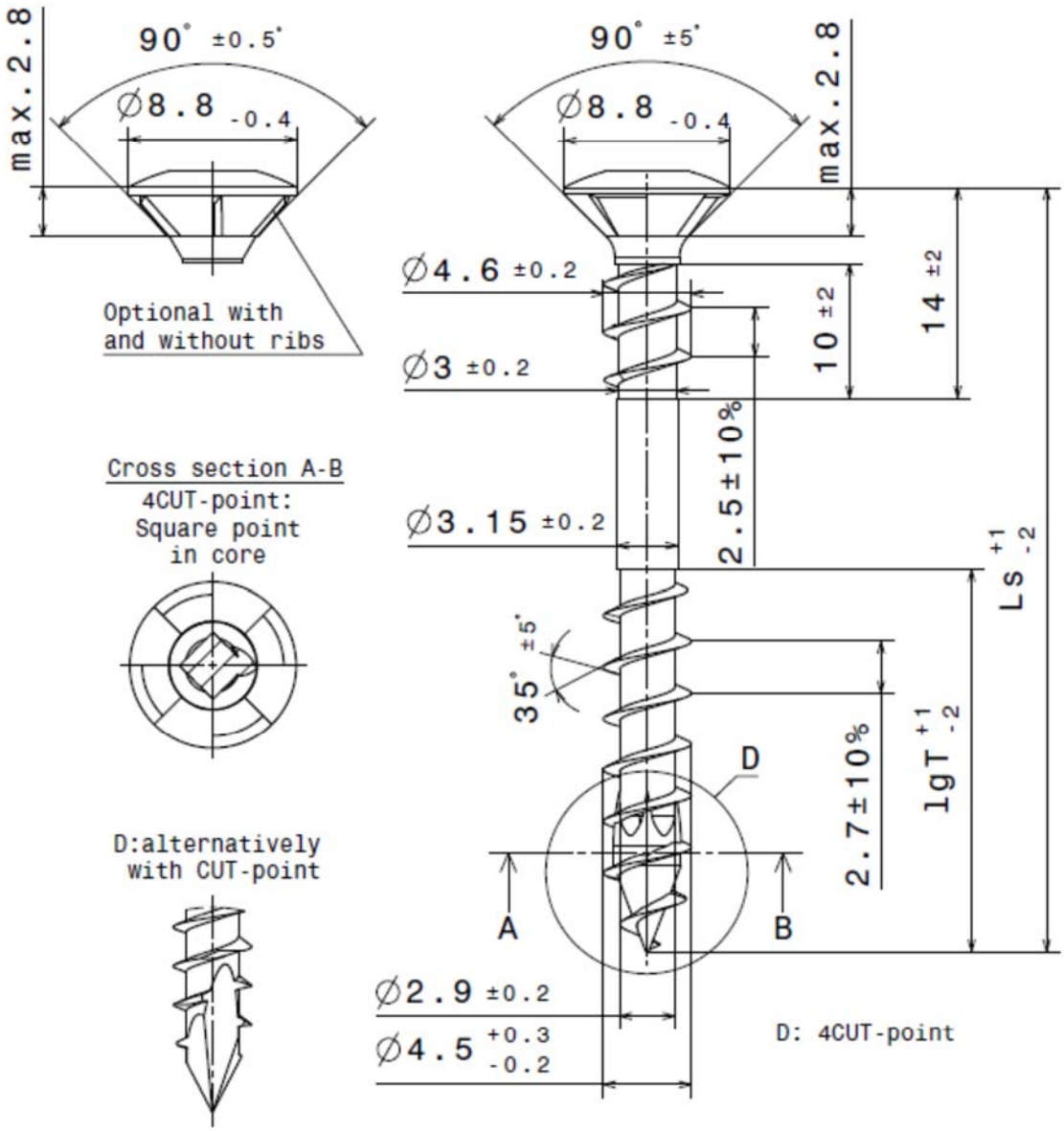

80	31
70	31
60	26
50	21
Ls	lgT*

*other thread lengths (lgT)
are acceptable if
lgT > 4 x Ø4,5

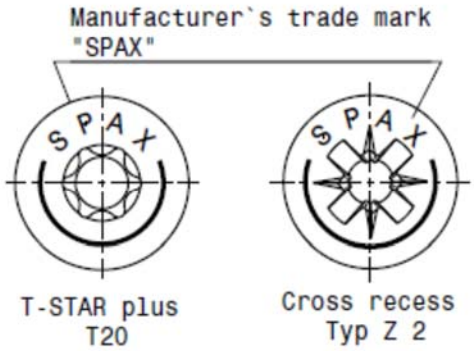

Annex A57

SPAX®

Self-tapping countersunk head screw with fixing thread

Material: cold rolled wire according to SPAX - Factory Standard Stainless steel screws

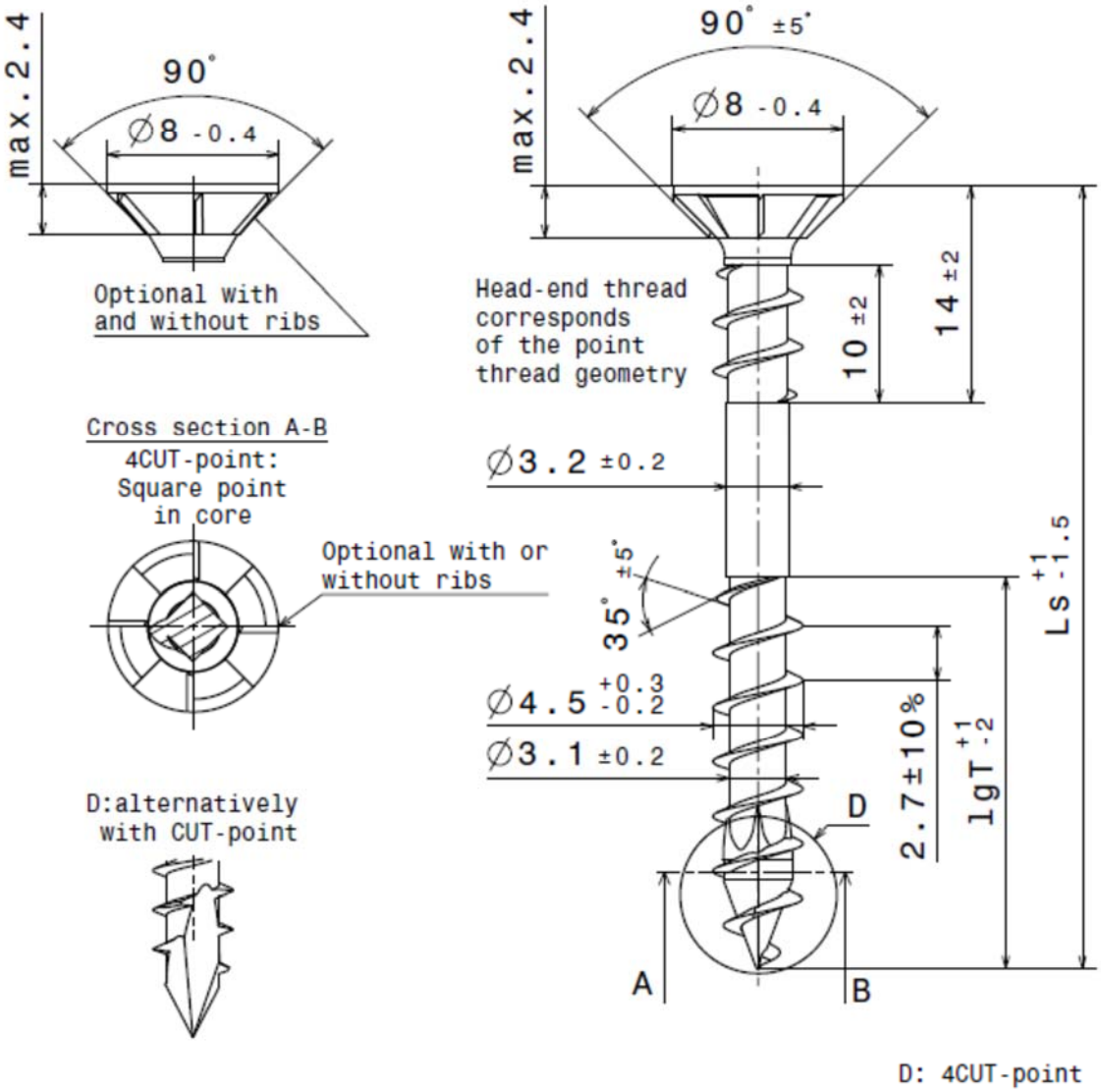

Manufacturer`s trade mark "SPAX"

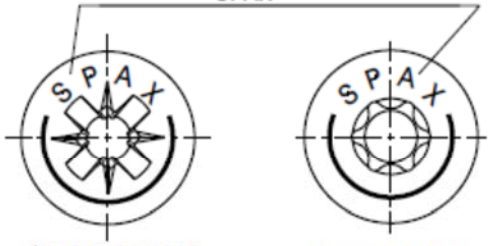

Cross recess Typ Z 2

T-STAR plus T 20

Ls	lgT*
50	26,5
60	26,5
70	31,5

*other thread lengths(lgT) are acceptable if lgT > 4 x Ø4,5

SPAX®

Self-tapping raised countersunk head screw with fixing thread

Material: cold rolled wire according to SPAX - Factory Standard Stainless steel screws

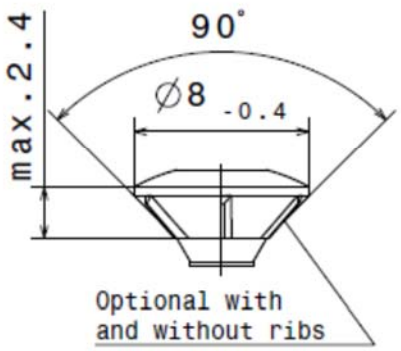

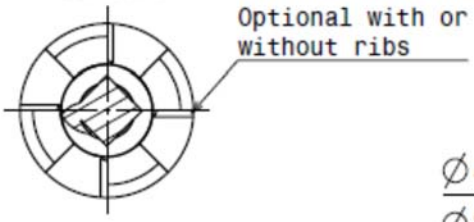

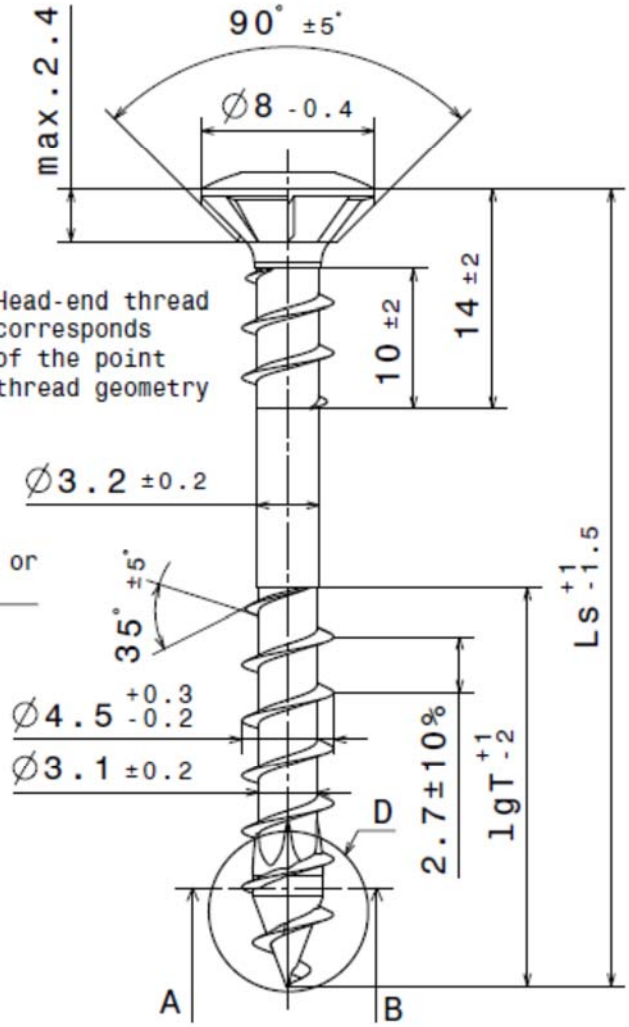

D: 4CUT-point

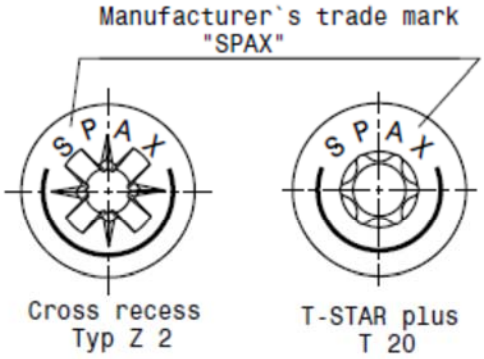

Ls	lgT*
50	26,5
60	26,5
70	31,5

*other thread lengths(lgT) are acceptable if lgT > 4 x Ø4,5

SPAX®

Self-tapping cylindric head screw with fixing thread

Material: cold rolled wire according to SPAX - Factory Standard
Screws of high carbon steel

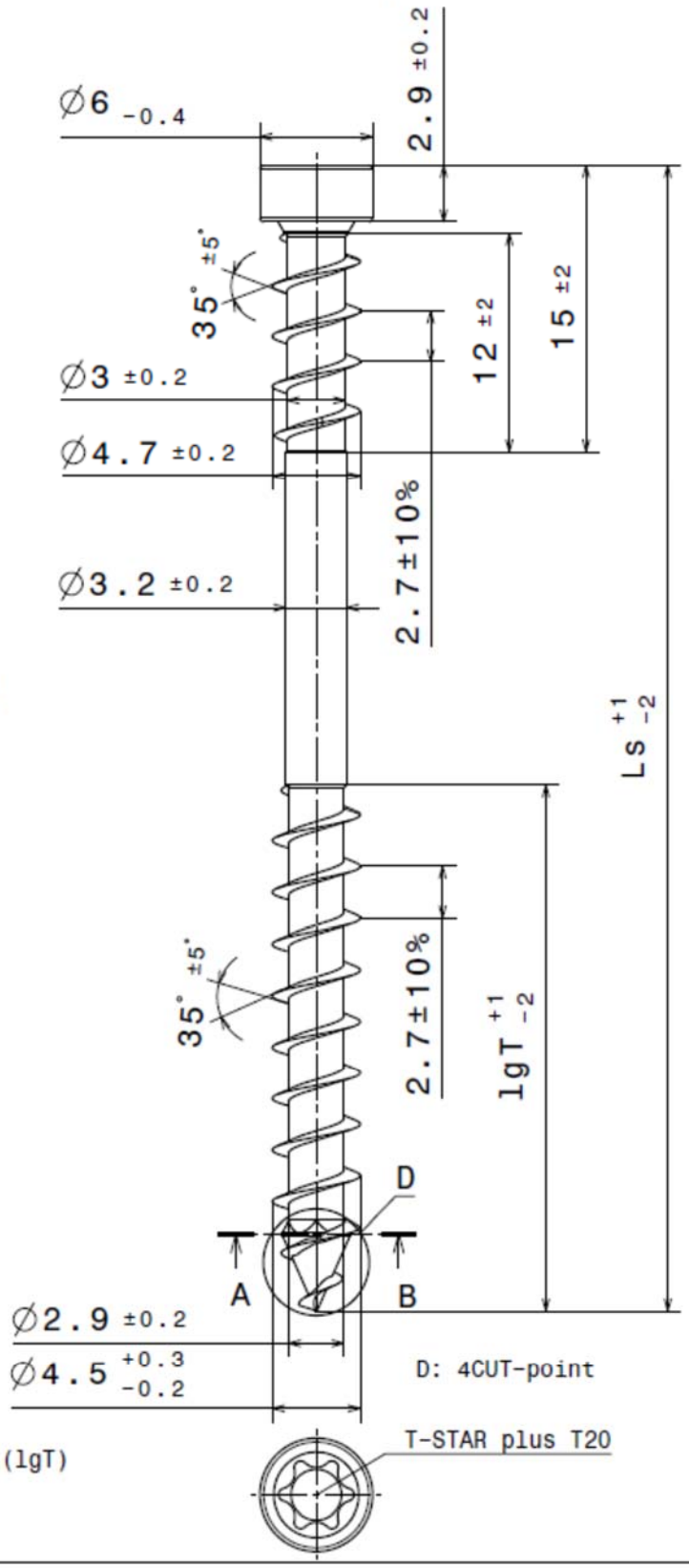

Cross section A-B

4CUT-point:
Square point
in core

80	32
70	32
60	27
50	22
40	17
Ls	lgT*

*other thread lengths (lgT)
are acceptable if
lgT > 4 x Ø4,6

Annex A60

SPAX®

Self-tapping raised countersunk head screw with CUT-point

Material: cold rolled wire according to SPAX - Factory Standard Stainless steel screws

Screws with CUT-point

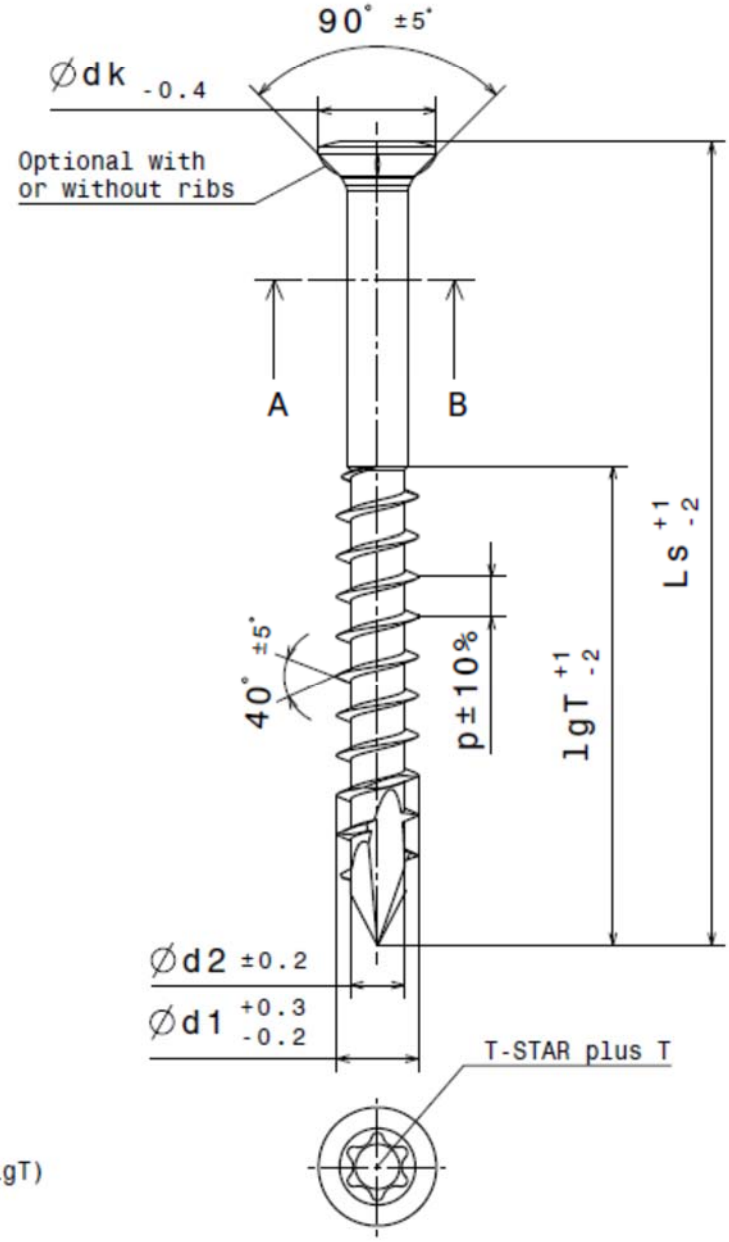

*other thread lengths (lgT) are acceptable if lgT > 4 x d1

5,0	3,3	8	T20	100	61	2,5
4,5	3	7	T15	70	42	2,2
4,0	2,7	6	T15	45	29	2
4,0	2,7	6	T15	40	24	2
d1	d2	dk	T	Ls	lgT*	p

Annex A61

SPAX®

Self-tapping cylindric head screw with fixing thread

Material: cold rolled wire according to SPAX - Factory Standard
Stainless steel screw

Screw with CUT-point

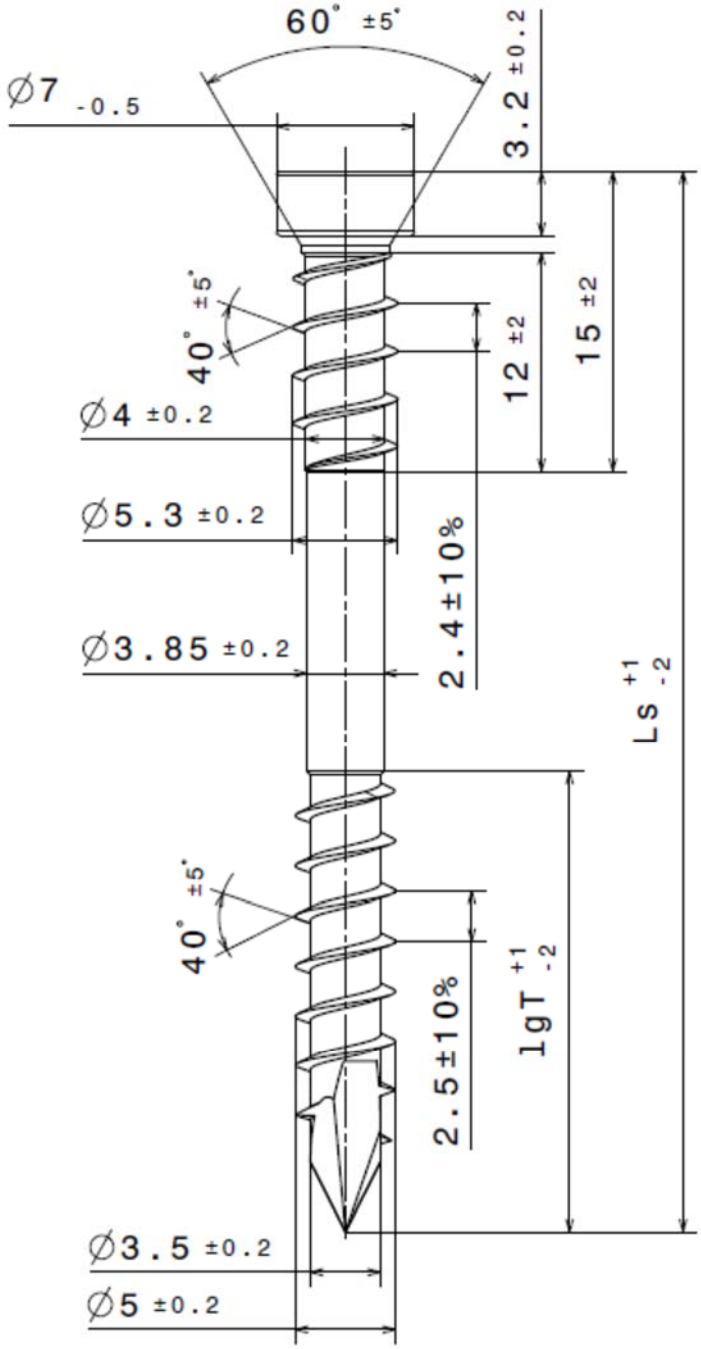

83	36
73	31
63	26
53	21
43	21
Ls	lgT*

*other thread lengths (lgT)
are acceptable if
lgT > 4 x Ø5,0

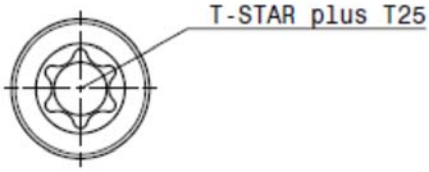

Annex A62

SPAX®

Self-tapping cylindric head screw with fixing thread

Material: cold rolled wire according to SPAX - Factory Standard
Stainless steel screw

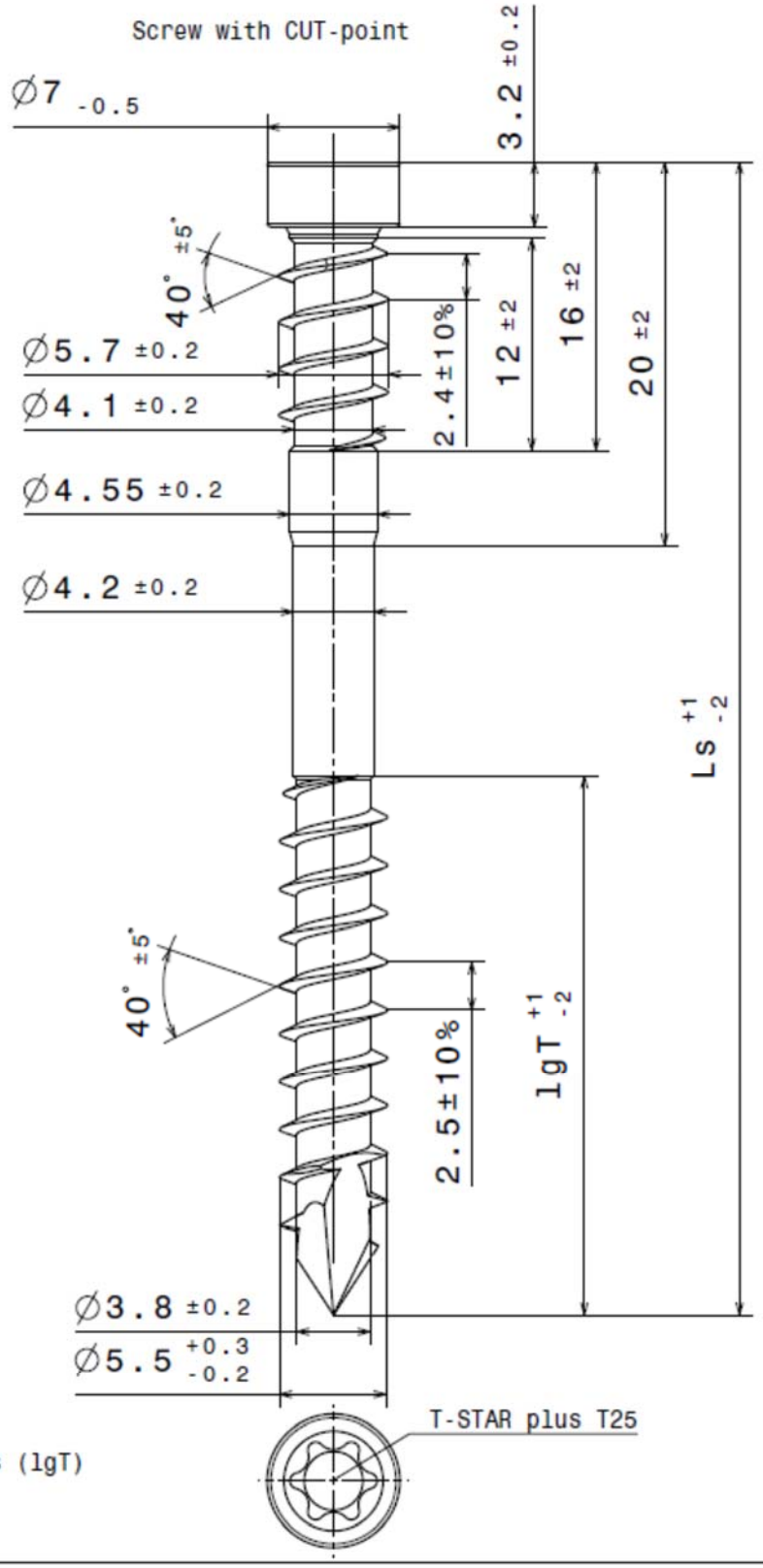

83	38
73	32
63	26
53	22
43	22
Ls	lgT*

*other thread lengths (lgT)
are acceptable if
lgT > 4 x Ø5,5

Annex A63

SPAX®

Self-tapping screw with fixing head

Material: cold rolled wire according to SPAX - Factory Standard
Stainless steel screw

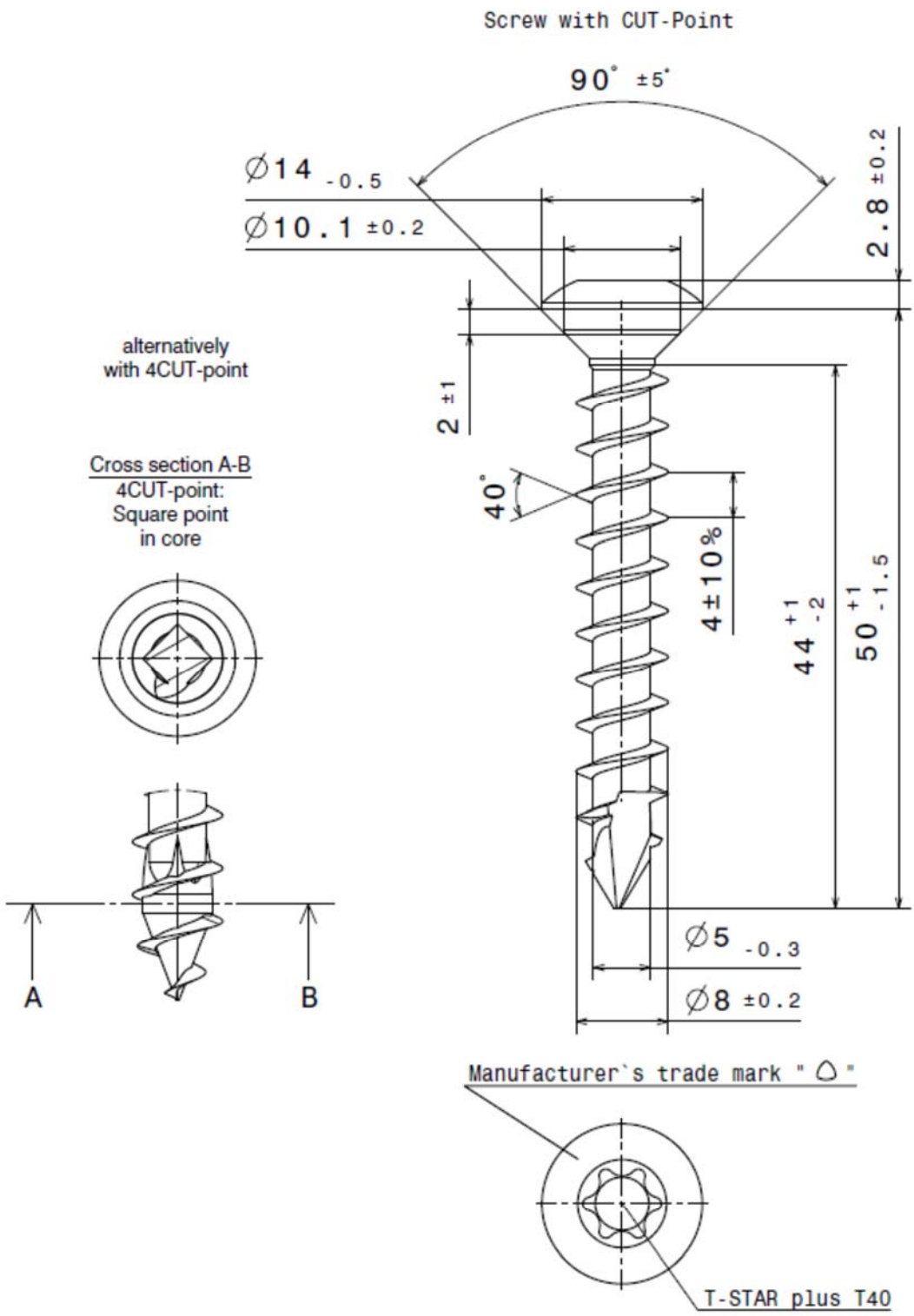

Annex A64

SPAX®

Self-tapping cylindric head screw with fixing thread

Material: cold rolled wire according to SPAX - Factory Standard
Stainless steel screw

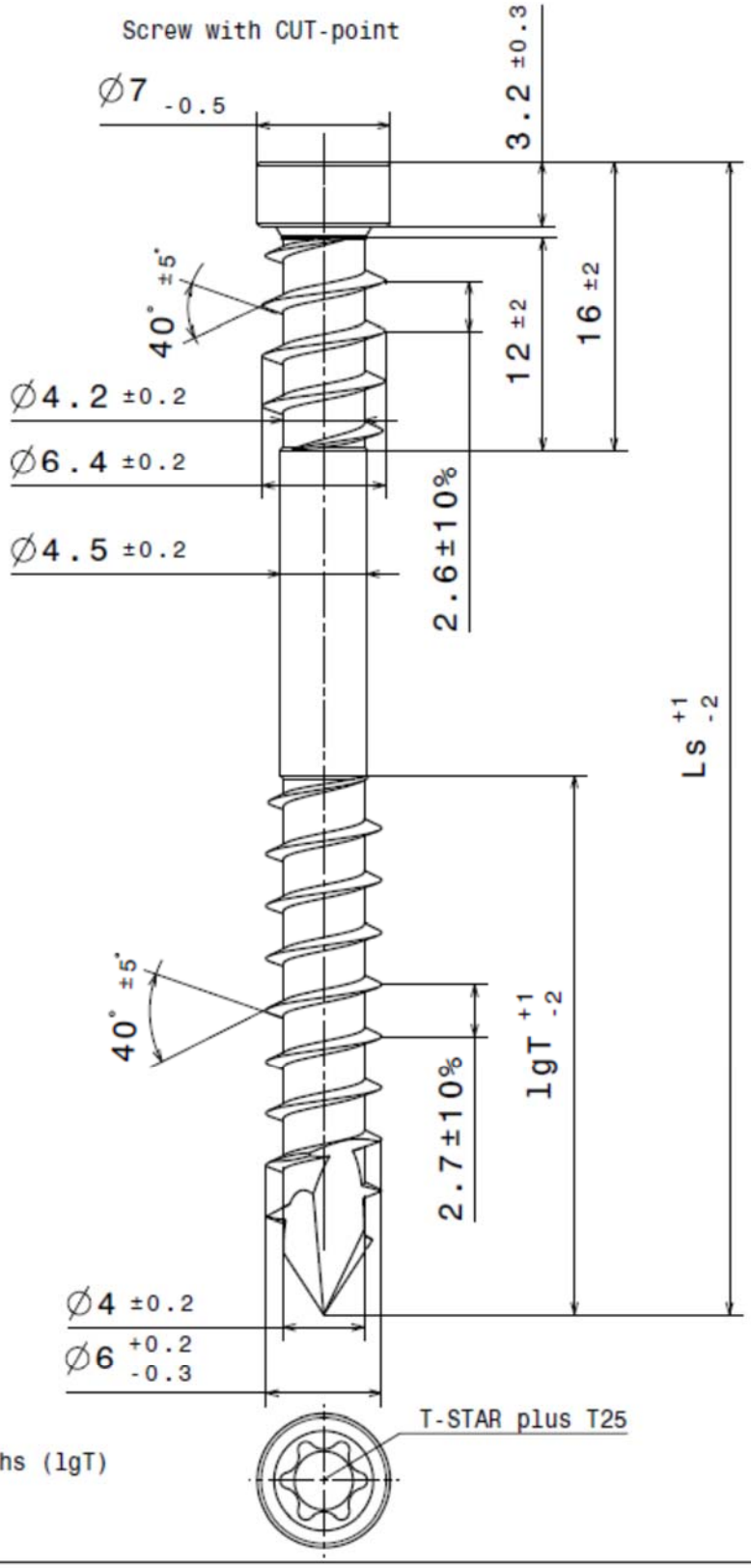

100	40
90	40
83	40
73	34
63	28
53	23
43	23
Ls	lgT*

*other thread lengths (lgT)
are acceptable if
lgT > 4 x Ø6,0

Annex A65

SPAX®	Self-tapping special washer head head screw with fixing thread
	Material: cold rolled wire according to SPAX - Factory Standard Stainless steel screw

Cross section A-B
4CUT-point:
square point
in core

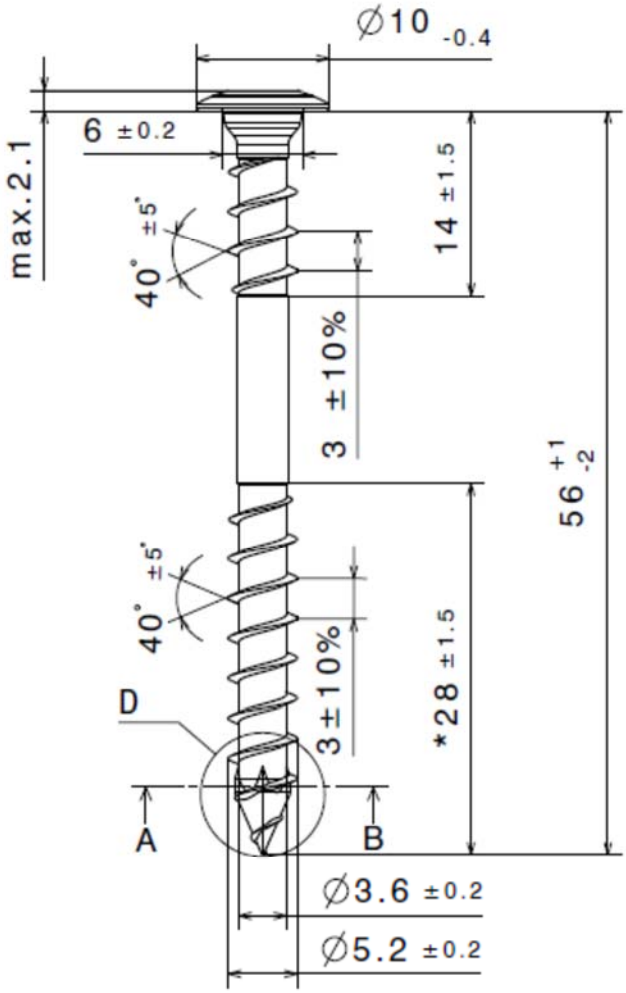

D: alternatively
with CUT-point

D: 4CUT point

T-STAR plus T20
Manufacturer's
trade mark "SPAX"

* other thread lengths (lgT)
are accepable if
lgT >4 x Ø5,0

SPAX®
Special Washer head

Self-tapping screw with full and partial thread

Material: cold rolled wire according to SPAX - Factory Standard
Screws of high carbon steel

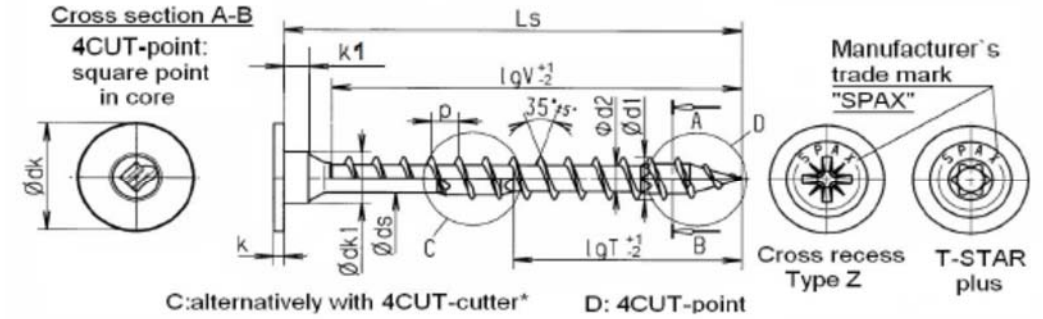

Nominal diamerer				4,5	5,0	6,0	8,0	10,0
d1	thread size			4,5	5,0	6,0	8,1	10,0
	permissible tolerance			+0,3/-0,2			±0,4	
dk	head diameter			10,3	11,3	13,3	20,0	25,0
	permissible tolerance			±0,3			±1,0	
dk1	diameter			6,3	6,3	7,5	8,8	13,5
	permissible tolerance			±0,3		±0,4		
d2	core diameter			3,1	3,5	3,9	5,0	6,1
	permissible tolerance			+0,1 / -0,3		+0,2/-0,3	±0,2	
ds	shank diameter			3,20	3,55	4,30	5,70	6,80
	permissible tolerance			±0,10			±0,25	
k	head height max.			1,5	1,5	2,0	2,5	3,0
k1	head height			1,5	1,5	1,8	2,0	2,5
	permissible tolerance			±0,3			±0,5	
p	thread pitch			2,7	3,0	3,6	4,8	6,0
	permissible tolerance			±0,1 x p				

T-STAR plus size				T20				T30		T40		T50	
Cross recess size Type Z				2				3					
Ls			Standard thread lengths (full thread = lgV / partial thread = lgT)										
Nom.dim.	min	max					lgV	lgT	lgV	lgT	lgV	lgT	lgV	lgT	lgV	lgT
25	*23,5*	*25,5*					*20,0*		*20,0*							
30	28,5	30,5					25,0		25,0		24,0					
35	*33,5*	*36,0*					*30,0*		*30,0*		*29,0*					
40	38,5	41,0					34,0	20,0	35,0	20,0	34,0		32,0			
45	*43,5*	*46,0*					*39,0*	*22,5*	*39,0*	*22,0*	*38,0*		*37,0*			
50	48,5	51,0					44,0	25,0	44,0	25,0	43,0	24,0	42,0		40,0	
55	*53,5*	*56,0*					*49,0*	*27,5*	*49,0*	*27,0*	*48,0*	*27,0*	*47,0*		*45,0*	
60	58,5	61,0					54,0	30,0	54,0	30,0	53,0	29,0	52,0		50,0	
65	*63,5*	*66,0*					*59,0*	*32,5*	*59,0*	*32,0*	*58,0*	*32,0*	*57,0*	*32,0*	*55,0*	
70	68,5	71,0					59,0	34,0	61,0	35,0	61,0	34,0	61,0	32,0	60,0	
75	*73,5*	*76,0*					*59,0*	*37,0*	*61,0*	*37,0*	*61,0*	*37,0*	*61,0*	*37,0*	*60,0*	
80	78,5	81,0					59,0	39,0	61,0	39,0	61,0	38,0	70,0	39,0	70,0	
90	*88,5*	*91,5*					*59,0*	*44,0*		*44,0*	*61,0*	*43,0*	*80,0*	*39,0*	*80,0*	
100	98,5	101,5						49,0		49,0	61,0	48,0	80,0	47,0	80,0	50,0
110	*108,5*	*111,5*						*54,0*		*54,0*	*68,0**	*53,0*	*80,0*	*47,0*	*80,0*	*50,0*
120	118,5	121,5								59,0	68,0*	56,0	80,0	57,0	80,0	60,0
130	*128,0*	*132,0*									*68,0**	*61,0*	*80,0*	*61,0*	*80,0*	*60,0*
140	138,0	142,0										68,0*		70,0		70,0
150	*148,0*	*152,0*										*68,0**		*70,0*		*70,0*
to																
160	158,0	162,0										68,0*		80,0		80,0
600	597,0	602,0												80,0		80,0

Screws of Ø6,0mm with partial thread additionally in lengths of 180 to 300 mm, in steps of 20 mm, LgT= 68,0 mm*
Intermediate lengths on Ls possible

Other thread lengths in the range ≥4xd1 to max. standard length permitted.
* Design C with lgT= max. 65,0 mm

Annex A67

SPAX®-S

Self-tapping screw with parrtial thread

Material: Cold rolled wire according to SPAX - Factory Standard

Screws of high-carbon steel

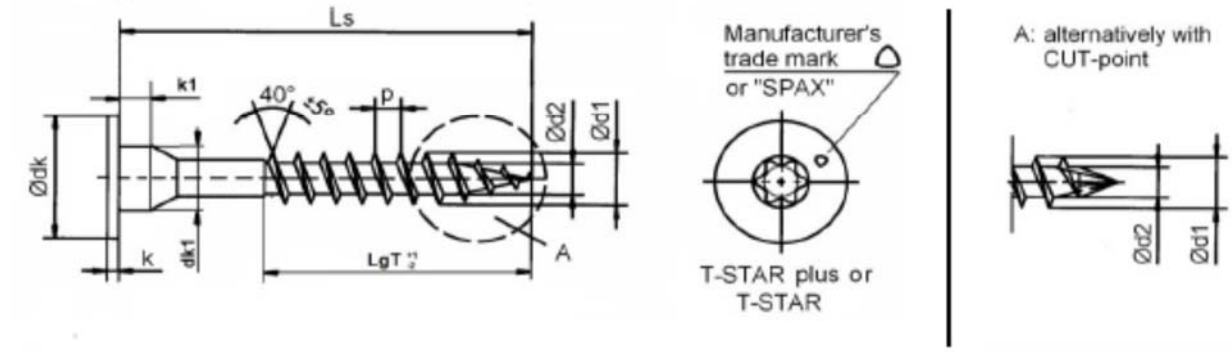

Nominal diameter			**12,0**
Type of Head			**Special Washer head**
d1	thread size		12,0
	permissible tolerance		±0,30
dk	head diameter		25,0 / 29,0
	permissible tolerance		±1,0
dk1	diameter		13,5
	permissible tolerance		±0,5
d2	core diameter		7,3
	permissible tolerance		±0,3
k	head height max.		4,0
k1	head height		2,5
	permissible tolerance		±0,5
p	thread pitch		6,0
	permissible tolerance		±0,1 x p
T - STAR plus	size		T50
Ls			Standard thread lengths partial thread = lgT)
Nom.dim.	min	max	lgT
80	78,5	81,5	50,0
90	*88,5*	*91,5*	*55,0*
100	98,5	101,5	60,0
110	*108,5*	*111,5*	*80,0*
120	118,5	121,5	80,0
130	*128,0*	*132,0*	*80,0*
140	138,0	142,0	80,0
150	*148,0*	*152,0*	*100,0*
160	158,0	162,0	100,0
180	*178,0*	*182,0*	*100,0*
200	198,0	202,0	100,0
to			
600	*597,0*	*602,0*	*100,0*

Screw lengths Ls to 600 mm possible

Other thread lenghts in the range ≥4xd1 to max. standard lenght permitted

Annex A68

Annex B
Minimum distances and spacing

Minimum distances and spacing for exclusively axially loaded SPAX screws with CUT or 4CUT drill tip or with d ≤ 8 mm in non-predrilled holes in members of solid timber, glued laminated timber or similar glued products
Single configuration

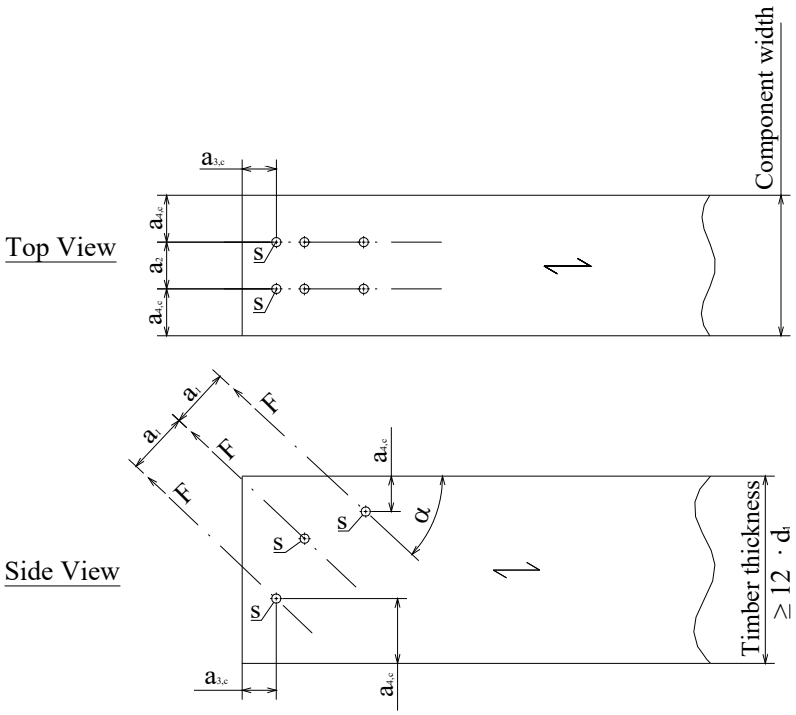

grain direction
screw axis
S centroid of the part of the screw in the timber
$15° \leq \alpha \leq 90°$

$a_1 \geq 5 \cdot d$
$a_2 \geq 2{,}5 \cdot d$
$a_{3,c} \geq 5 \cdot d$
$a_{4,c} \geq 4 \cdot d$
$\geq 3 \cdot d$ for screws with CUT or 4CUT drill tip
$a_1 \cdot a_2 \geq 25 \cdot d^2$

Minimum distances and spacing see also 3.11
Minimum timber thickness t = 12 · d for solid or glued laminated timber and t = 6 · d for laminated veneer lumber, see also 3.11

Minimum distances and spacing for exclusively axially loaded SPAX screws with CUT or 4CUT drill tip or with d ≤ 8 mm in non-predrilled holes in members of solid timber, glued laminated timber or similar glued products
Crosswise configuration

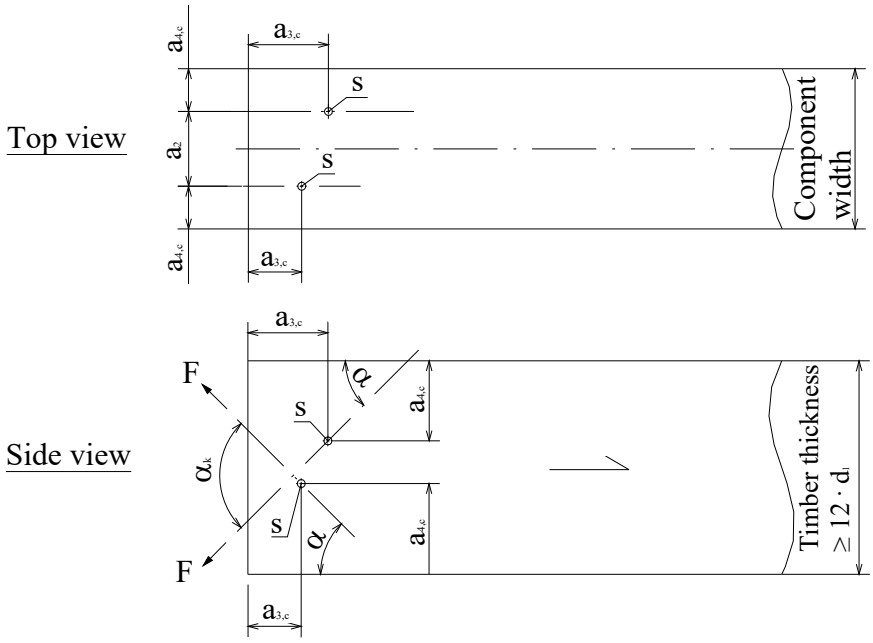

grain direction
screw axis
S centroid of the part of the screw in the timber
$15° \leq \alpha \leq 90°$

$a_1 \geq 5 \cdot d$
$a_2 \geq 1{,}5 \cdot d$ for $70° < \alpha_k \leq 90°$
$\geq 2{,}5 \cdot d \cdot (1 - \alpha_k / 180°)$ for $30° \leq \alpha_k \leq 70°$
$a_{3,c} \geq 5 \cdot d$
$a_{4,c} \geq 4 \cdot d$
$\geq 3 \cdot d$ for screws with CUT or 4CUT drill tip
$a_1 \cdot a_2 \geq 25 \cdot d^2$

Minimum distances and spacing see also 3.11
Minimum timber thickness t = 12 · d for solid or glued laminated timber and t = 6 · d for laminated veneer lumber, see also 3.11

Mechanically jointed beams

SPAX screws with a full thread or threaded rods may be used for connections in structural members which are composed of several parts in mechanically jointed beams or columns.

The axial slip modulus K_{ser} of a screw or threaded rod with a full thread for the serviceability limit state in the direction of the screw axis should be taken independent of angle α to the grain as:

$C = K_{ser} = 25 \cdot d \cdot \ell_{ef}$ [N/mm] for screws or threaded rods in softwood
$C = K_{ser} = 30 \cdot d \cdot \ell_{ef}$ [N/mm] for screws in pre-drilled hardwood

Where
d outer thread diameter [mm]
ℓ_{ef} penetration length in the respective structural member [mm], $\ell_{ef} = \ell_1$ or ℓ_2

Axially loaded SPAX screws or threaded rods in solid or glued laminated timber or laminated veneer lumber
Single configuration

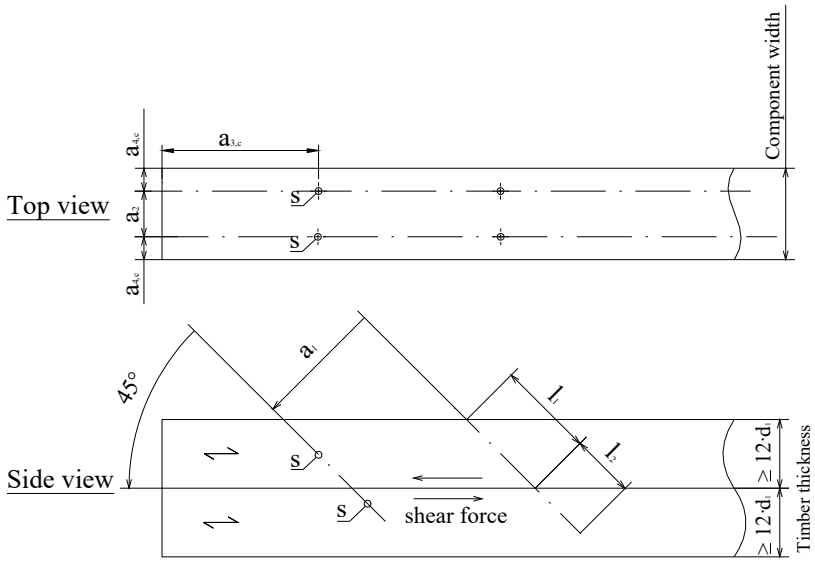

grain direction
screw axis
S centroid of the part of the screw in the timber

$a_1 \geq 5 \cdot d$
$a_2 \geq 2{,}5 \cdot d$
$a_{3,c} \geq 5 \cdot d$
$a_{4,c} \geq 4 \cdot d$
$\geq 3 \cdot d$ for screws with CUT or 4CUT drill tip
$a_1 \cdot a_2 \geq 25 \cdot d^2$

Minimum distances and spacing see also 3.11
Minimum timber thickness $t = 12 \cdot d$ for solid or glued laminated timber and $t = 6 \cdot d$ for laminated veneer lumber, see also 3.11

Axially loaded SPAX screws or threaded rods in solid or glued laminated timber or laminated veneer lumber
Crosswise configuration

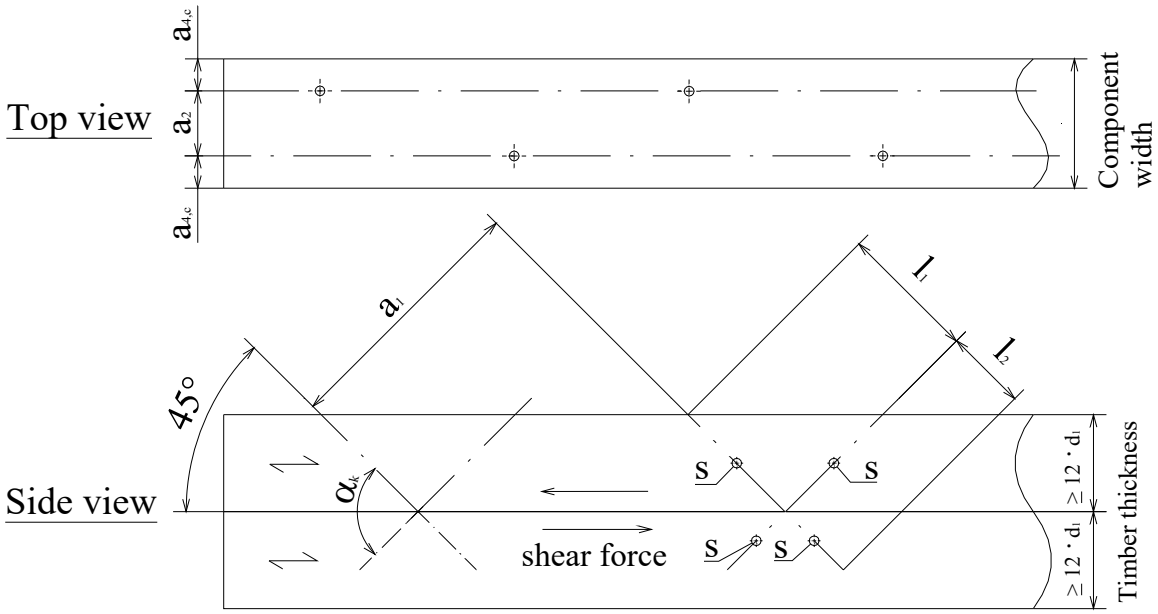

grain direction
screw axis
S centroid of the part of the screw in the timber

$a_1 \geq 5 \cdot d$
$a_2 \geq 2{,}5 \cdot d$ ($a_2 \geq 1{,}5 \cdot d$ between the crossing screws of a screw couple)
$a_{3,c} \geq 5 \cdot d$
$a_{4,c} \geq 4 \cdot d$
$\geq 3 \cdot d$ for screws with CUT or 4CUT drill tip
$a_1 \cdot a_2 \geq 25 \cdot d^2$

Minimum distances and spacing see also 3.11
Minimum timber thickness $t = 12 \cdot d$ for solid or glued laminated timber and $t = 6 \cdot d$ for laminated veneer lumber, see also 3.11

Axially or laterally loaded screws in the plane or edge surface of cross laminated timber

Definition of spacing, end and edge distances in the plane surface unless otherwise specified in the technical specification (ETA or hEN) for the cross laminated timber:

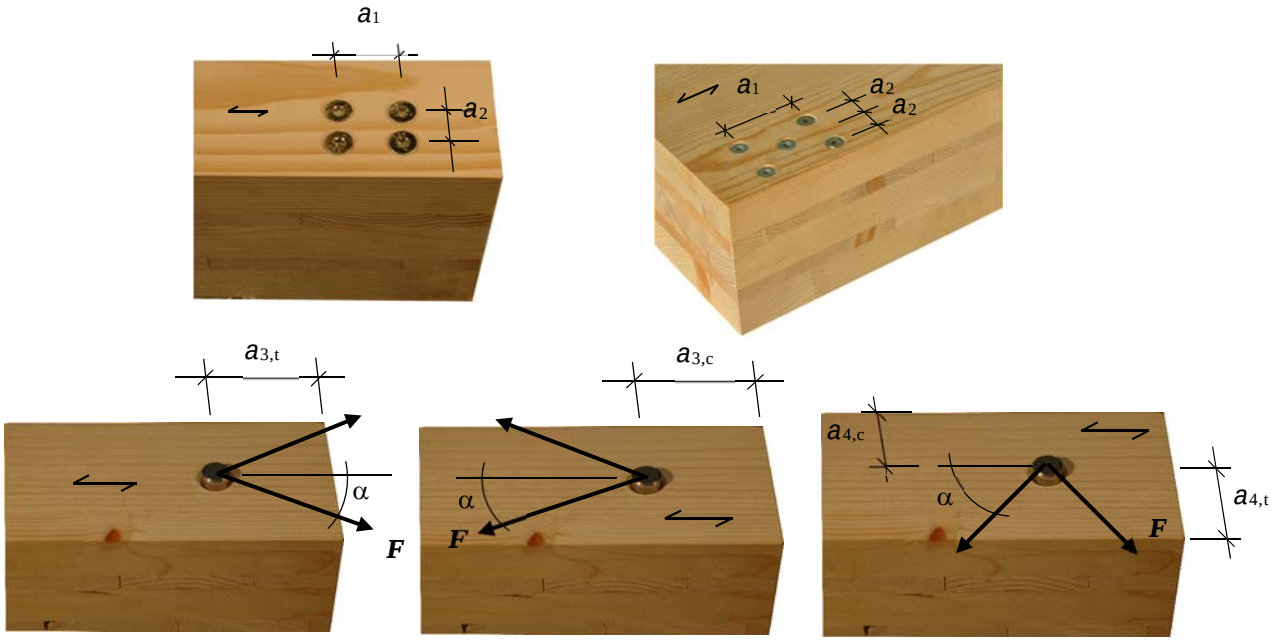

Definition of spacing, end and edge distances in the edge surface unless otherwise specified in the technical specification (ETA or hEN) for the cross laminated timber:

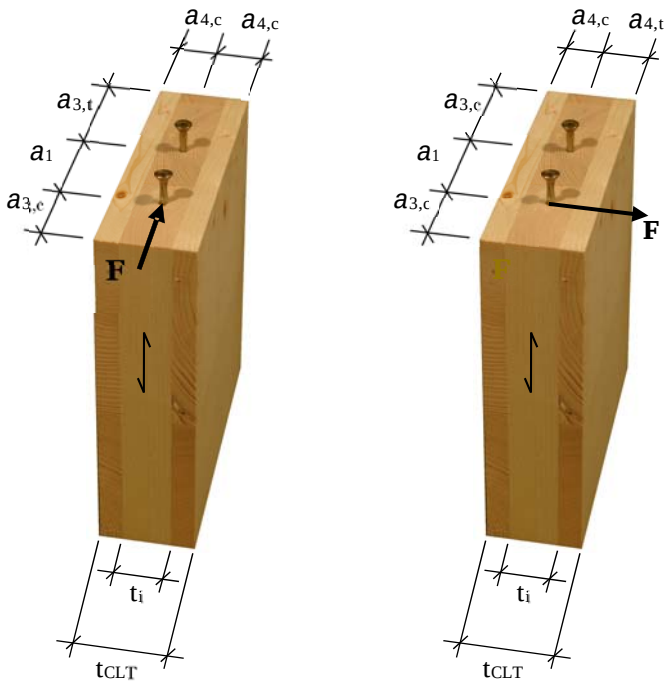

Annex C

Compression reinforcement

SPAX screws or threaded rods with a full thread may be used for reinforcement of timber members with compression stresses at an angle α to the grain of 45° ≤ α ≤ 90°. The compression force must be evenly distributed over all screws. An appropriate steel plate as intermediate layer between timber member and support has to be installed. The screws have to be driven into the timber member flush with the surface to provide both direct contact with the steel plate and direct contact between steel plate and timber.

The characteristic load-carrying capacity for a contact area with screws with a full thread at an angle α to the grain of 45° ≤ α ≤ 90° shall be calculated from:

$$F_{90,Rd} = \min \begin{cases} k_{c,90} \cdot B \cdot \ell_{ef,1} \cdot f_{c,90,d} + n \cdot F_{ax,Rd} \\ B \cdot \ell_{ef,2} \cdot f_{c,90,d} \end{cases} \qquad \text{(C.1)}$$

Where

$F_{90,Rd}$ Design load-carrying capacity of reinforced contact area [N]
$k_{c,90}$ factor for compression perpendicular to the grain according to EN 1995-1-1
B bearing width [mm]
$\ell_{ef,1}$ effective length of contact area according to EN 1995-1-1 [mm]
$f_{c,90,d}$ design compressive strength perpendicular to the grain [N/mm²]
n number of reinforcement screws, $n = n_0 \cdot n_{90}$
n_0 number of reinforcement screws arranged in a row parallel to the grain
n_{90} number of reinforcement screws arranged in a row perpendicular to the grain
$F_{ax,Rd}$ Design compressive capacity [N], see page 7
$\ell_{ef,2}$ effective distribution length in the plane of the screw tips [mm]
$\ell_{ef,2}$ $= \ell_{ef} + (n_0 - 1) \cdot a_1 + \min(\ell_{ef}; a_{3,c})$ for end-bearings [mm]
$\ell_{ef,2}$ $= 2 \cdot \ell_{ef} + (n_0 - 1) \cdot a_1$ for centre-bearings [mm]
ℓ_{ef} point side penetration length [mm]
a_1 spacing parallel to the grain [mm]
$a_{3,c}$ end distance [mm]

If screws are driven into the member from top and bottom and the screws are overlapping at least 10·d, i.e. $\ell_{ef,top} + \ell_{ef,bottom} \geq H + 10 \cdot d$, the second condition in equation (C.1) may be disregarded.

Reinforcing screws or threaded rods for wood-based panels are not covered by this European Technical Assessment.

Reinforced centre-bearing

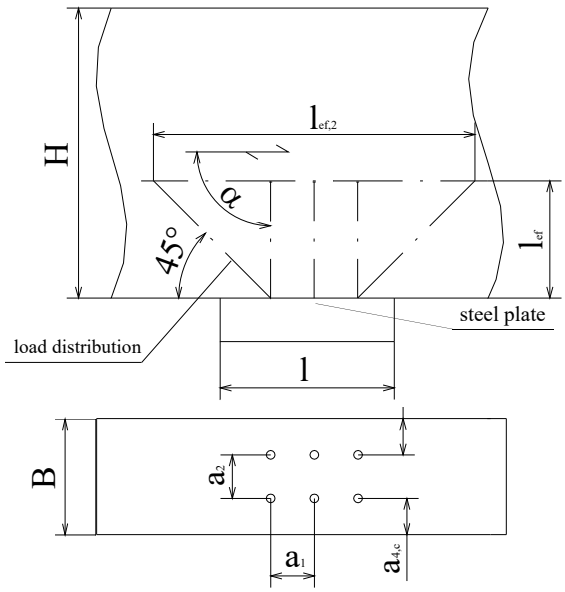

H component height [mm]
B bearing width [mm]
ℓ_{ef} point side penetration length [mm]
$\ell_{ef,2}$ effective distribution length in the plane of the screw tips [mm]
$= 2 \cdot \ell_{ef} + (n_0 - 1) \cdot a_1$ for centre-bearings

grain direction
screw axis
45° ≤ α ≤ 90°

Reinforced end-bearing

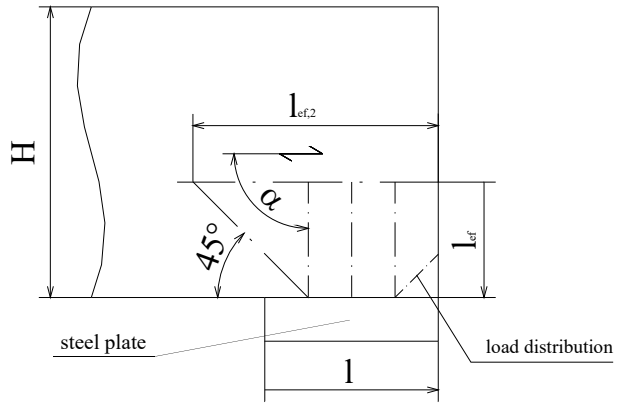

H component height [mm]
B bearing width [mm]
ℓ_{ef} point side penetration length [mm]
$\ell_{ef,2}$ effective distribution length in the plane of the screw tips [mm]
$= \ell_{ef} + (n_0 - 1) \cdot a_1 + \min(\ell_{ef}; a_{3,c})$ for end-bearings

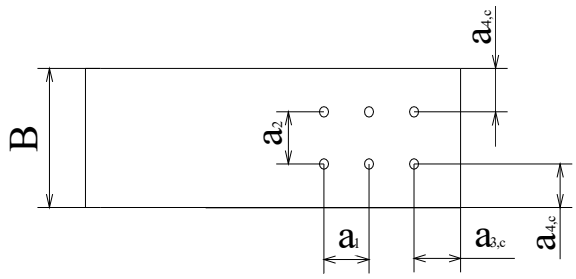

grain direction
screw axis
$45° \leq \alpha \leq 90°$

$a_1 \geq 5 \cdot d$
$a_2 \geq 2{,}5 \cdot d$
$a_{3,c} \geq 5 \cdot d$
$a_{4,c} \geq 4 \cdot d$
$\geq 3 \cdot d$ for screws with CUT or 4CUT drill tip
$a_1 \cdot a_2 \geq 25 \cdot d^2$

The screw heads must be flush with the surface of the structural timber member.

Annex D
Tensile reinforcement perpendicular to grain

Unless specified otherwise in national provisions that apply at the installation site, the axial capacity of a reinforcement of a timber member loaded by a connection force perpendicular to the grain shall fulfil the following condition:

$$\frac{\left[1-3\cdot\alpha^2+2\cdot\alpha^3\right]\cdot F_{90,d}}{F_{ax,Rd}}\leq 1$$

Where

$F_{90,d}$ Design value of the force component perpendicular to the grain [N],

α = a/h

h = member depth [mm]

$F_{ax,Rd}$ Minimum of the design values of the withdrawal capacity and the tensile capacity of the reinforcing screws or threaded rods where ℓ_{ef} is the smaller value of the penetration depth below or above the potential crack

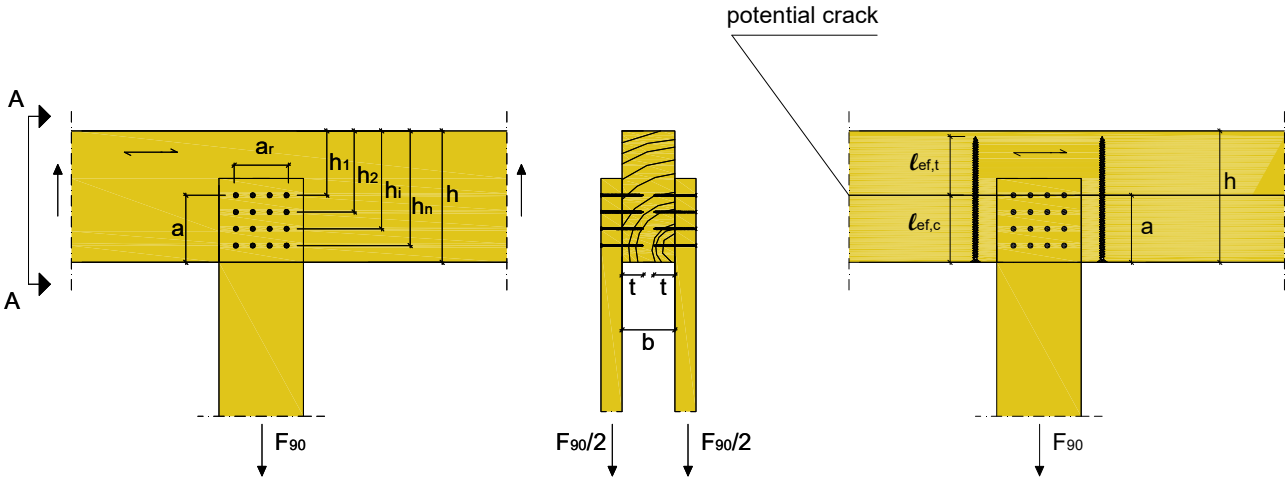

–

Unless specified otherwise in national provisions that apply at the installation site, the axial capacity of a reinforcement of a notched beam support shall fulfil the following condition:

$$\frac{1{,}3\cdot V_d\cdot\left[3\cdot(1-\alpha)^2-2\cdot(1-\alpha)^3\right]}{F_{ax,Rd}}\leq 1$$

Where

V_d Design value of the shear force [N],

α = h/h_e

h = member depth [mm]

$F_{ax,Rd}$ Minimum of the design values of the withdrawal capacity and the tensile capacity of the reinforcing screws or threaded rods where ℓ_{ef} is the smaller value of the penetration depth below or above the potential crack [N]

The minimum spacing a_2 of threaded rods used as reinforcement of a notched beam support is $a_2 = 3\cdot d$, the minimum end or edge distance is $a_{3,c} = 2{,}5\cdot d$ or $a_{4,c} = 2{,}5\cdot d$.

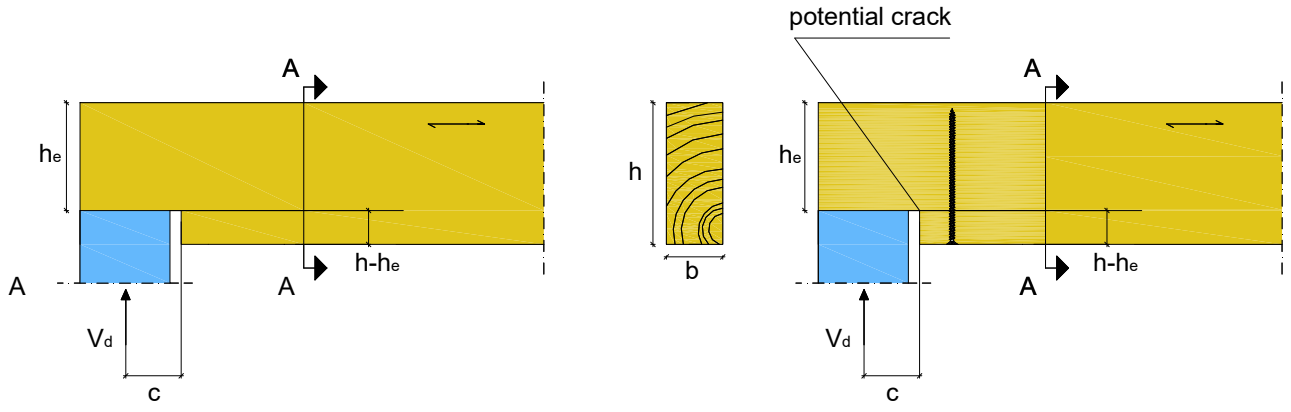

Unless specified otherwise in national provisions that apply at the installation site, the axial capacity of a reinforcement of a hole in a beam shall fulfil the following condition:

$$\frac{F_{t,V,d} + F_{t,M,d}}{F_{ax,Rd}} \leq 1$$

Where

$F_{t,V,d}$ Design value of the force perpendicular to the grain due to shear force [N]:

$$F_{t,V,d} = \frac{V_d \cdot h_d}{4 \cdot h} \cdot \left[3 - \frac{h_d^2}{h^2} \right]$$

V_d Design value of the member shear force at the hole end [N],
h = member depth [mm]
h_d = hole depth for rectangular holes [mm]
h_d = 70 % of hole diameter for circular holes [mm]

$F_{t,M,d}$ Design value of the force perpendicular to the grain due to bending moment [N]:

$$F_{t,M,d} = 0{,}008 \cdot \frac{M_d}{h_r}$$

M_d Design value of the member bending moment at the hole end [Nmm],
h_r = min (h_{ro} ; h_{ru}) for rectangular holes [mm]
h_r = min (h_{ro} ; h_{ru}) + 0,15·h_d for circular holes [mm]

$F_{ax,Rd}$ Minimum of the design values of the withdrawal capacity and the tensile capacity of the reinforcing screws or threaded rods where ℓ_{ef} is the smaller value of the penetration depth below or above the potential crack [N].

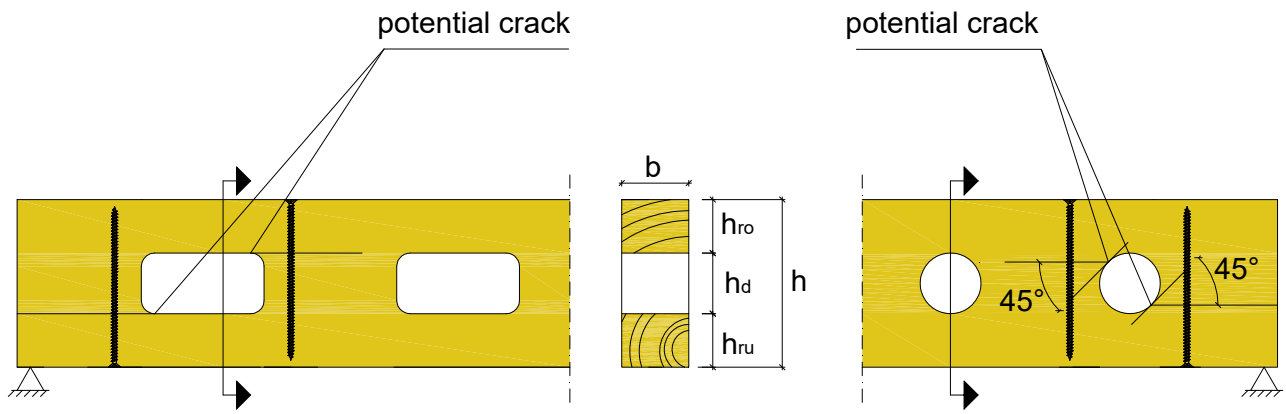

Apart from the reinforcement with screws, strength verification is required for the shear strength of the timber member in the vicinity of the hole.

Annex E
Shear reinforcement

Unless specified otherwise in national provisions that apply at the installation site, the shear stress in reinforced areas of timber members with a stress component parallel to the grain shall fulfil the following condition:

$$\tau_d \leq \frac{f_{v,d} \cdot k_\tau}{\eta_H}$$

Where:

τ_d is the design shear stress disregarding the reinforcement [N/mm²];

$f_{v,d}$ is the design shear strength [N/mm²];

$$k_\tau = 1 - 0{,}46 \cdot \sigma_{90,d} - 0{,}052 \cdot \sigma_{90,d}^2$$

$\sigma_{90,d}$ is the design stress perpendicular to the grain (negative value for compression) [N/mm²];

$$\sigma_{90,d} = \frac{F_{ax,d}}{\sqrt{2} \cdot b \cdot a_1}$$

$$F_{ax,d} = \frac{\sqrt{2} \cdot (1 - \eta_H) \cdot V_d \cdot a_1}{h} \text{ [N]}$$

$$\eta_H = \frac{G \cdot b}{G \cdot b + \dfrac{1}{2 \cdot \sqrt{2} \left(\dfrac{6}{\pi \cdot d \cdot h \cdot k_{ax}} + \dfrac{a_1}{EA_S} \right)}}$$

V_d is the design shear force [N];

G is the shear modulus of the timber member, G = 650 [N/mm²],

b is the width of the timber member [mm],

d is the outer thread diameter [mm],

h is the depth of the timber member [mm],

k_{ax} is the connection stiffness between rod or screw and timber member [N/mm³],
k_{ax} = 5 N/mm³ for threaded rods d = 16 mm, k_{ax} = 12,5 N/mm³ for self-tapping screws d = 8 mm,

a_1 is the spacing parallel to the grain of the rods or screws arranged in one row [mm], for n parallel rows, an effective spacing $a_{1,ef} = a_1/n$ may be used,

EA_S is the axial stiffness of one rod or screw [N],

$$EA_S = \frac{E \cdot \pi \cdot d_2^2}{4} = 165.000\, d_2^2,$$

d_2 is the inner thread diameter of the rod or screw [mm],
d_2 = 12 mm for threaded rods d = 16 mm, d_2 = 5 mm for screws d = 8 mm.

The axial capacity of a threaded rod or screw shall fulfil the following condition:

$$\frac{F_{ax,d}}{F_{ax,Rd}} \leq 1$$

where: $F_{ax,Rd}$ Minimum of the design values of the withdrawal capacity and the tensile capacity of the reinforcing rods or screws. The effective penetration length is 50 % of the threaded length [N].

Outside reinforced areas (shaded area in Figure E.1) the shear design shall fulfil the conditions for unreinforced members.

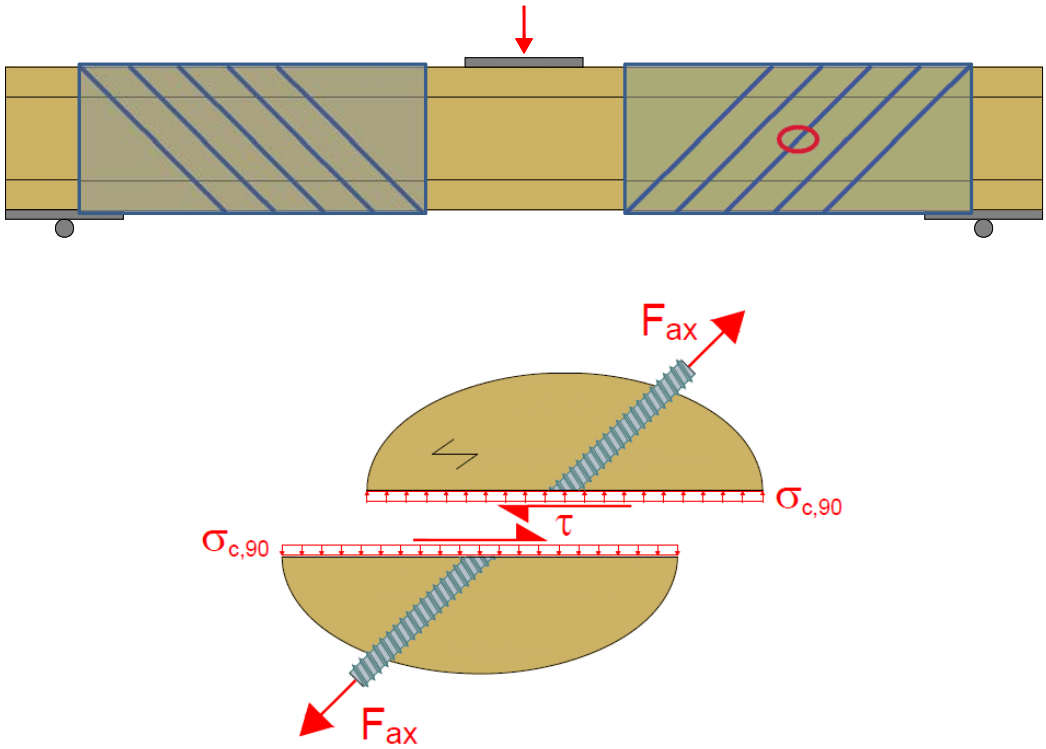

Figure E.1: Timber member with shear reinforcement; shaded areas: reinforced areas with screws arranged under 45°

Annex F

Thermal insulation material on top of rafters

SPAX screws with an outer thread diameter 6 mm ≤ d ≤ 12 mm may be used for the fixing of Thermal insulation material on top of rafters.

The thickness of the insulation shall not exceed 400 mm. The rafter insulation must be placed on top of solid timber or glued laminated timber rafters or cross-laminated timber members and be fixed by battens arranged parallel to the rafters or by wood-based panels on top of the insulation layer. The insulation of vertical facades is also covered by the rules given here.

Screws must be screwed in the rafter through the battens or panels and the insulation without pre-drilling in one sequence.

The angle α between the screw axis and the grain direction of the rafter should be between 30° and 90°.

The rafter consists of solid timber (softwood) according to EN 338, glued laminated timber according to EN 14081, cross-laminated timber, or laminated veneer lumber according to EN 14374 or to European Technical Assessment or similar glued members according to European Technical Assessment and has a minimum width of 60 mm.

The battens must be from solid timber (softwood) according to EN 338:2003-04. The minimum thickness t and the minimum width b of the battens is given as follows:

Screws d ≤ 8,0 mm: b_{min} = 50 mm t_{min} = 30 mm
Screws d = 10 mm: b_{min} = 60 mm t_{min} = 40 mm
Screws d = 12 mm: b_{min} = 80 mm t_{min} = 100 mm

Alternatively, to the battens, panels with a minimum thickness of 20 mm from plywood according to EN 636, particleboard according to EN 312, oriented strand board OSB/3 and OSB/4 according to EN 300 or European Technical Assessment and solid wood panels according to EN 13353 may be used. This only applies to the system with parallel inclined screws.

The insulation must comply with a European Technical Assessment.

Friction forces shall not be considered for the design of the characteristic axial capacity of the screws.

The anchorage of wind suction forces as well as the bending stresses of the battens or the boards, respectively, shall be considered in design. Additional screws perpendicular to the grain of the rafter (angle α = 90°) may be arranged if necessary.

The maximum screw spacing is e_{Scr} = 1,75 m.

Thermal insulation material on rafters with parallel inclined screws

Mechanical model

The system of rafter, Thermal insulation material on top of rafter and battens parallel to the rafter may be considered as a beam on elastic foundation. The batten represents the beam, and the Thermal insulation material on top of the rafter the elastic foundation. The minimum compression stress of the Thermal insulation material at 10 % deformation, measured according to EN 826[1], shall be $\sigma_{(10\,\%)}$ = 0,05 N/mm². The batten is loaded perpendicular to the axis by point loads F_b. Further point loads F_s are from the shear load of the roof due to dead and snow load, which are transferred from the screw heads into the battens.

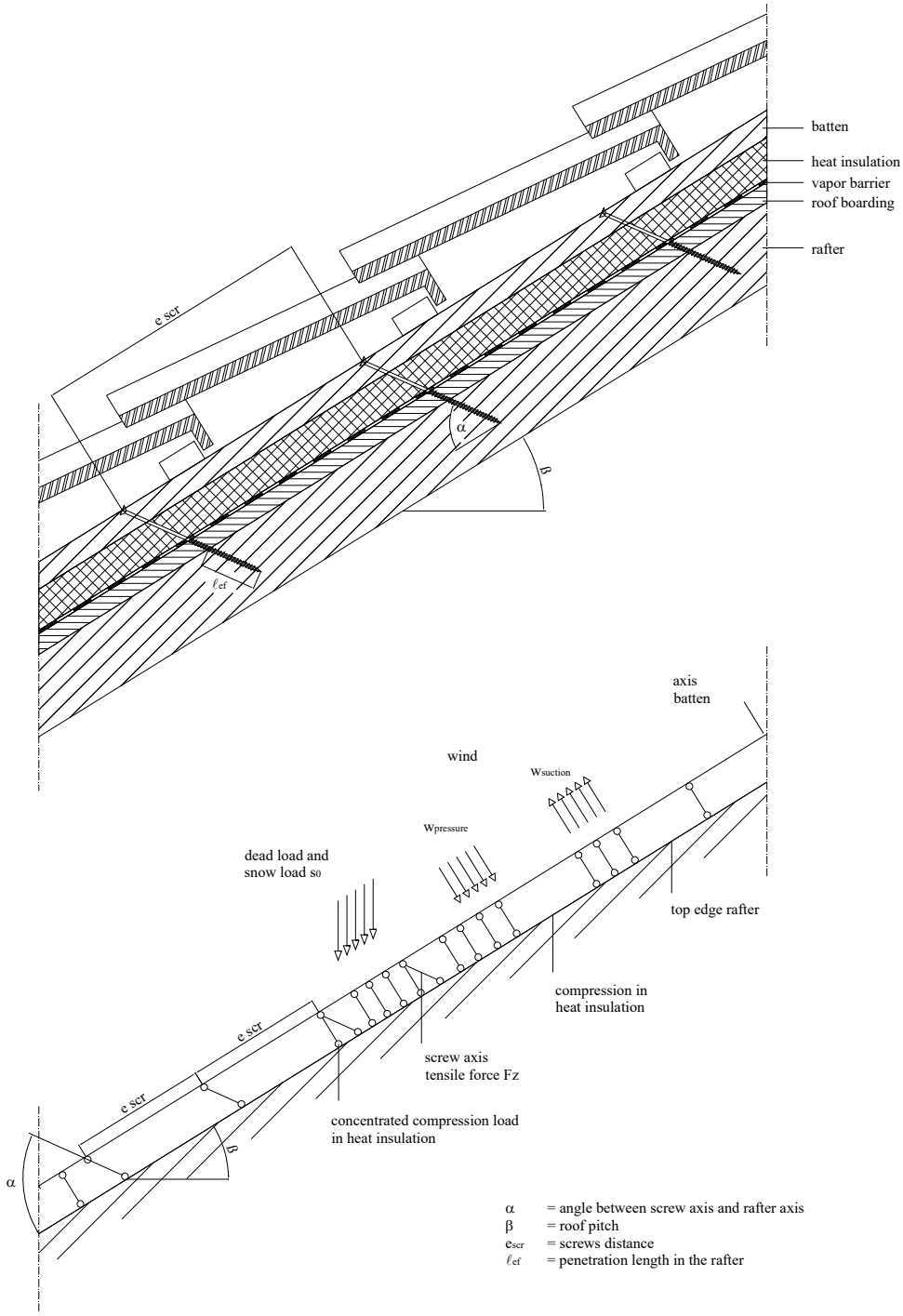

[1] EN 826:1996 Thermal insulating products for building applications - Determination of compression behaviour

Design of the battens

The bending stresses are calculated as:

$$M = \frac{(F_b + F_s) \cdot \ell_{char}}{4}$$

Where

ℓ_{char} = characteristic length $\ell_{char} = \sqrt[4]{\frac{4 \cdot EI}{w_{ef} \cdot K}}$

EI = bending stiffness of the batten [Nmm²]
K = coefficient of subgrade [N/mm³]
w_{ef} = effective width of the Thermal insulation material [mm]
F_b = Point loads perpendicular to the battens [N]
F_s = Point loads perpendicular to the battens, load application in the area of the screw heads [N]

The coefficient of subgrade K may be calculated from the modulus of elasticity E_{HI} and the thickness t_{HI} of the Thermal insulation material if the effective width w_{ef} of the Thermal insulation material under compression is known. Due to the load extension in the Thermal insulation material the effective width w_{ef} is greater than the width of the batten or rafter, respectively. For further calculations, the effective width w_{ef} of the Thermal insulation material may be determined according to:

$$w_{ef} = w + t_{HI} / 2$$

where
w = minimum width of the batten or rafter, respectively [mm]
t_{HI} = thickness of the Thermal insulation material [mm]

$$K = \frac{E_{HI}}{t_{HI}}$$

The following condition shall be satisfied:

$$\frac{\sigma_{m,d}}{f_{m,d}} = \frac{M_d}{W \cdot f_{m,d}} \leq 1$$

For the calculation of the section modulus W the net cross section has to be considered.

The shear stresses shall be calculated according to:

$$V = \frac{(F_b + F_s)}{2}$$

The following condition shall be satisfied:

$$\frac{\tau_d}{f_{v,d}} = \frac{1{,}5 \cdot V_d}{A \cdot f_{v,d}} \leq 1$$

For the calculation of the cross section area the net cross section has to be considered.

Design of the Thermal insulation material

The compressive stresses in the Thermal insulation material shall be calculated according to:

$$\sigma = \frac{1{,}5 \cdot F_b + F_s}{2 \cdot \ell_{char} \cdot w}$$

The design value of the compressive stress shall not be greater than 110 % of the compressive stress at 10 % deformation calculated according to EN 826.

Design of the screws

The screws are loaded predominantly axially. The axial tension force in the screw may be calculated from the shear loads of the roof R_s:

$$T_S = \frac{R_S}{\cos\alpha}$$

The load-carrying capacity of axially loaded screws is the minimum design value of the axial withdrawal capacity of the threaded part of the screw, the head pull-through capacity of the screw and the tensile capacity of the screw.

In order to limit the deformation of the screw head for Thermal insulation material thicknesses over 200 mm or with compressive strength below 0,12 N/mm², respectively, the axial withdrawal capacity of the screws shall be reduced by the factors k_1 and k_2:

$$F_{ax,\alpha,Rd} = \min\left\{\frac{f_{ax,d}\cdot d\cdot \ell_{ef}\cdot k_1\cdot k_2}{1.2\cdot\cos^2\alpha+\sin^2\alpha}\cdot\left(\frac{\rho_k}{350}\right)^{0.8};f_{head,d}\cdot d_h^2\cdot\left(\frac{\rho_k}{350}\right)^{0.8};\frac{f_{tens,k}}{\gamma_{M2}}\right\}$$ for SPAX screws with partial thread

$$F_{ax,\alpha,Rd} = \min\left\{\begin{array}{l}\dfrac{f_{ax,d}\cdot d\cdot \ell_{ef}\cdot k_1\cdot k_2}{1,2\cdot\cos^2\alpha+\sin^2\alpha}\cdot\left(\dfrac{\rho_k}{350}\right)^{0,8}\\ \max\left\{f_{head,d}\cdot d_h^2;\dfrac{f_{ax,d}\cdot d\cdot \ell_{ef,b}\cdot k_1\cdot k_2}{1,2\cdot\cos^2\alpha+\sin^2\alpha}\right\}\cdot\left(\dfrac{\rho_k}{350}\right)^{0,8}\\ \dfrac{f_{tens,k}}{\gamma_{M,2}}\end{array}\right\}$$ for SPAX screws with full or double thread

where:

$f_{ax,d}$	design value of the axial withdrawal parameter of the threaded part of the screw [N/mm²]
d	outer thread diameter of the screw [mm]
ℓ_{ef}	Point side penetration length of the threaded part of the screw in the batten [mm], $l_{ef} \geq 40$ mm
$\ell_{ef,b}$	Penetration length of the threaded part of the screw in the batten [mm]
α	Angle between grain and screw axis [°] ($\alpha \geq 30°$)
ρ_k	characteristic density of the wood-based member [kg/m³]
$f_{head,d}$	design value of the head pull-through capacity of the screw [N/mm²]
d_h	head diameter [mm]
$f_{tens,k}$	characteristic tensile capacity of the screw [N]
γ_{M2}	partial factor according to EN 1993-1-1 or to the particular national annex
k_1	min {1; 200/t_{HI}}
k_2	min {1; $\sigma_{10\%}$/0,12}
t_{HI}	thickness of the Thermal insulation material [mm]
$\sigma_{10\%}$	compressive stress of the Thermal insulation material under 10 % deformation [N/mm²]

If equation k_1 and k_2 are considered, the deflection of the battens does not need to be considered. Alternatively to the battens, panels with a minimum thickness of 20 mm from plywood according to EN 636 or an ETA or national provisions that apply at the installation site, particle board according to EN 312 or an ETA or national provisions that apply at the installation site, oriented strand board according to EN 300 or an ETA or national provisions that apply at the installation site and solid wood panels according to EN 13353 or an ETA or national provisions that apply at the installation site or cross laminated timber according to an ETA may be used.

Thermal insulation material on rafters with alternatively inclined screws

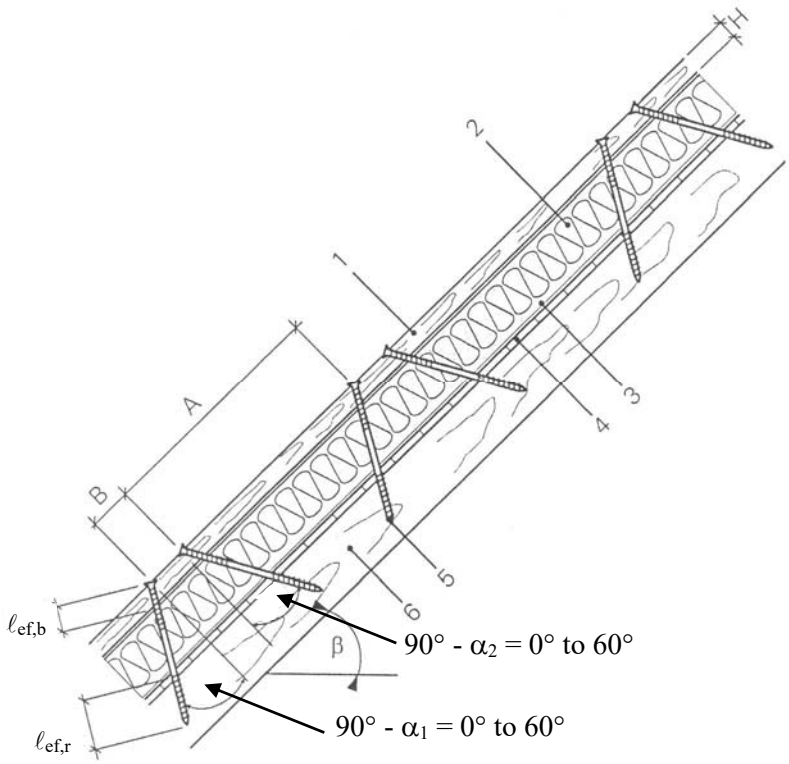

1 Counter batten
2 Insulation
3 Vapour barrier
4 Sheathing
5 Compressive screw
6 Rafter

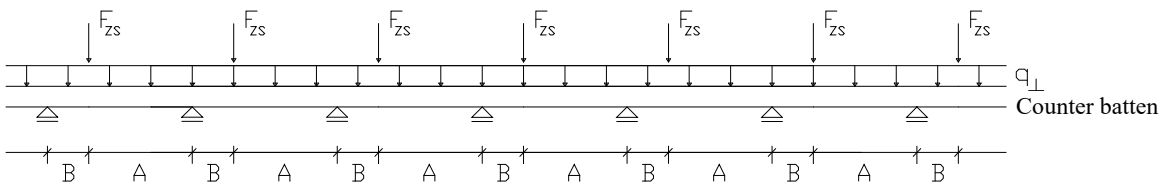

Mechanical model

Depending on the screw spacing and the arrangement of tensile and compressive screws with different inclinations the battens are loaded by significant bending moments. The bending moments are derived based on the following assumptions:

- The tensile and compressive loads in the screws are determined based on equilibrium conditions from the actions parallel and perpendicular to the roof plane.
  These actions are constant line loads $q_\perp$ and $q_{||}$.
- The screws act as hinged columns supported 10 mm within the batten or rafter, respectively. The effective column length consequently equals the length of the screw between batten and rafter plus 20 mm.
- The batten is considered as a continuous beam with a constant span ℓ = A + B.
  The compressive screws constitute the supports of the continuous beam while the tensile screws transfer concentrated loads perpendicular to the batten axis.

The screws are predominantly loaded in withdrawal or compression, respectively. The screw's normal forces are determined based on the loads parallel and perpendicular to the roof plane:

Compressive screw: $$F_{c,Ed} = (A+B)\cdot\left(-\frac{q_{II}}{\cos\alpha_1 + \sin\alpha_1 / \tan\alpha_2} - \frac{q_\perp \cdot \sin(90° - \alpha_2)}{\sin(\alpha_1 + \alpha_2)}\right)$$

Tensile screw: $$F_{t,Ed} = (A+B)\cdot\left(\frac{q_{II}}{\cos\alpha_2 + \sin\alpha_2 / \tan\alpha_1} - \frac{q_\perp \cdot \sin(90° - \alpha_1)}{\sin(\alpha_1 + \alpha_2)}\right)$$

The bending moments in the batten follow from the constant line load $q_{\perp}$ and the load components perpendicular to the batten from the tensile screws. The span of the continuous beam is (A + B). The load component perpendicular to the batten from the tensile screw is:

$$F_{ZS,Ed} = (A+B)\cdot\left(\frac{q_{II}}{1/\tan\alpha_1 + 1/\tan\alpha_2} - \frac{q_{\perp}\cdot\sin(90° - \alpha_1)\cdot\sin\alpha_2}{\sin(\alpha_1+\alpha_2)}\right)$$

Where:

q_{II} Constant line load parallel to batten [N/mm]

$q_{\perp}$ Constant line load perpendicular to batten [N/mm]

α_1 Angle between compressive screw axis and grain direction [°]

α_2 Angle between tensile screw axis and grain direction [°]

A positive value for F_{ZS} means a load towards the rafter, a negative value a load away from the rafter.

Design of the screws

The load-carrying capacity of the screws shall be calculated as follows:

Screws loaded in tension:

$$F_{ax,\alpha,Rd} = \min\left\{\frac{f_{ax,d}\cdot d\cdot \ell_{ef,b}}{1.2\cdot\cos^2\alpha + \sin^2\alpha}\cdot\left(\frac{\rho_{b,k}}{350}\right)^{0.8};\frac{f_{ax,d}\cdot d\cdot \ell_{ef,r}}{1.2\cdot\cos^2\alpha + \sin^2\alpha}\cdot\left(\frac{\rho_{r,k}}{350}\right)^{0.8};\frac{f_{tens,k}}{\gamma_{M2}}\right\}$$

Screws loaded in compression:

$$F_{ax,\alpha,Rd} = \min\left\{\frac{f_{ax,d}\cdot d\cdot \ell_{ef,b}}{1.2\cdot\cos^2\alpha + \sin^2\alpha}\cdot\left(\frac{\rho_{b,k}}{350}\right)^{0.8};\frac{f_{ax,d}\cdot d\cdot \ell_{ef,r}}{1.2\cdot\cos^2\alpha + \sin^2\alpha}\cdot\left(\frac{\rho_{r,k}}{350}\right)^{0.8};\frac{\kappa_c\cdot N_{pl,k}}{\gamma_{M,1}}\right\}$$

where:

$f_{ax,d}$	design value of the axial withdrawal capacity of the threaded part of the screw [N/mm²]
d	outer thread diameter of the screw [mm]
$\ell_{ef,b}$	Length of the threaded part in the batten including the head for tensile and excluding the head for compressive force [mm]
$\ell_{ef,r}$	penetration length of the threaded part of the screw in the rafter [mm], $l_{ef} \geq 40$ mm
$\rho_{b,k}$	characteristic density of the batten [kg/m³]
$\rho_{r,k}$	characteristic density of the rafter [kg/m³]
α	angle α_1 or α_2 between screw axis and grain direction, $30° \leq \alpha_1 \leq 90°$, $30° \leq \alpha_2 \leq 90°$
$f_{tens,k}$	characteristic tensile capacity of the screw [N]
γ_{M1}, γ_{M2}	partial factor according to EN 1993-1-1 or to the particular national annex
$\kappa_c \cdot N_{pl,k}$	Buckling capacity of the screw [N]

Free screw length [mm]	Carbon steel				Stainless steel	
	6,0 mm	8,0 mm	10,0 mm	12,0 mm	10,0 mm	12,0 mm
	$\kappa_c \cdot N_{pl,k}$ [kN]	$\kappa_c \cdot N_{pl,k}$ [kN]	$\kappa_c \cdot N_{pl,k}$ [kN]	$\kappa_c \cdot N_{pl,k}$ [kN]	$\kappa_c \cdot N_{pl,k}$ [kN]	$\kappa_c \cdot N_{pl,k}$ [kN]
≤ 100	1,12	2,79	6,09	12,0	5,22	9,68
120	0,85	2,12	4,68	9,39	4,16	7,97
140	0,66	1,66	3,70	7,50	3,36	6,58
160	0,53	1,34	2,99	6,10	2,76	5,48
180	0,43	1,10	2,48	5,06	2,30	4,62
200		0,92	2,07	4,26	1,94	3,93
220		0,78	1,76	3,65	1,66	3,38
240		0,67	1,51	3,14	1,44	2,94
260		0,58	1,32	2,73	1,26	2,58
280		0,51	1,15	2,40	1,11	2,28
300		0,45	1,02	2,13	0,98	2,02
320		0,40	0,91	1,90	0,88	1,82
340		0,36	0,82	1,70	0,79	1,63
360		0,32	0,73	1,53	0,71	1,48
380		0,29	0,67	1,39	0,65	1,34
400		0,26	0,61	1,27	0,59	1,22
420		0,24	0,55	1,16	0,54	1,12
440		0,22	0,51	1,06	0,49	1,03
460		0,20	0,47	0,98	0,46	0,95
480		0,19	0,43	0,91	0,42	0,88