Deutsches Institut für Bautechnik DIBt

Member of EOTA
www.eota.eu

Approval body for construction products and types of construction

Bautechnisches Prüfamt

An institution established by the Federal and Laender Governments

Designated according to Article 29 of Regulation (EU) No 305/2011 and member of EOTA (European Organisation for Technical Assessment)

European Technical Assessment

ETA-20/0385 of 2 July 2020

English translation prepared by DIBt - Original version in German language

General Part

Technical Assessment Body issuing the European Technical Assessment:	Deutsches Institut für Bautechnik
Trade name of the construction product	ABC-Wood Construction Screws
Product family to which the construction product belongs	Screws and threaded rods for use in timber constructions
Manufacturer	ABC Verbindungstechnik GmbH Kölner Straße 71-77 58256 Ennepetal DEUTSCHLAND
Manufacturing plant	Plant 21
This European Technical Assessment contains	51 pages including 5 annexes which form an integral part of this assessment
This European Technical Assessment is issued in accordance with Regulation (EU) No 305/2011, on the basis of	EAD 130118-01-0603

The European Technical Assessment is issued by the Technical Assessment Body in its official language. Translations of this European Technical Assessment in other languages shall fully correspond to the original issued document and shall be identified as such.

Communication of this European Technical Assessment, including transmission by electronic means, shall be in full. However, partial reproduction may only be made with the written consent of the issuing Technical Assessment Body. Any partial reproduction shall be identified as such.

This European Technical Assessment may be withdrawn by the issuing Technical Assessment Body, in particular pursuant to information by the Commission in accordance with Article 25(3) of Regulation (EU) No 305/2011.

Specific part

1 Technical description of the product

ABC-Wood Construction Screws PT-1, ABC-Wood Construction Screws FT-1, ABC-Wood Construction Screws FT-2 and ABC-Wood Construction Screws FT-3 are self-tapping screws made from special carbon steel. The screws are hardened. The screws have a corrosion protection according to Annex A.2.6 and an antifriction coating. The outer thread diameter is not less than 3.0 mm and not greater than 14.0 mm. The overall length of the screws is ranging from 16 mm to 1500 mm. Further dimensions are shown in Annex 5.

The washers are made from carbon steel. The dimensions of the washers are given in Annex 5.

All ABC-Wood Construction Screws achieve a bending angle α of at least $45/d^{0.7} + 20$, where d is the outer thread diameter of the screws.

2 Specification of the intended use in accordance with the applicable European Assessment Document

The performances given in Section 3 are only valid if the screws are used in compliance with the specifications and conditions given in Annex 1 and 2.

The verifications and assessment methods on which this European Technical Assessment is based lead to the assumption of a working life of the screws of at least 50 years. The indications given on the working life cannot be interpreted as a guarantee given by the producer, but are to be regarded only as a means for choosing the right products in relation to the expected economically reasonable working life of the works.

3 Performance of the product and references to the methods used for its assessment

3.1 Mechanical resistance and stability (BWR 1)

Essential characteristic	Performance
Dimensions	See Annex 5
Characteristic yield moment	See Annex 2
Bending angle	See Annex 2
Characteristic withdrawal parameter	See Annex 2
Characteristic head pull-through parameter	See Annex 2
Characteristic tensile strength	See Annex 2
Characteristic yield strength	See Annex 2
Characteristic torsional strength	See Annex 2
Insertion moment	See Annex 2
Spacing, end and edge distances of the screws and minimum thickness of the wood-based material	See Annex 2
Slip modulus for mainly axially loaded screws	See Annex 2
Durability against corrosion	See Annex 2

3.2 Safety in case of fire (BWR 2)

Essential characteristic	Performance
Reaction to fire	Class A1

3.3 Safety and accessibility in use (BWR 4)

Same as BWR 1

4 Assessment and verification of constancy of performance (AVCP) system applied, with reference to its legal base

In accordance with EAD No. 130118-01-0603 the applicable European legal act is: 97/176/EC.

The system to be applied is: 3

5 Technical details necessary for the implementation of the AVCP system, as provided for in the applicable EAD

Technical details necessary for the implementation of the AVCP system are laid down in the control plan deposited with Deutsches Institut für Bautechnik.

Issued in Berlin on 2 July 2020 by Deutsches Institut für Bautechnik

BD Dipl.-Ing. Andreas Kummerow
Head of Department

beglaubigt:
Vössing

Annex 1 Specifications of intended use

A.1.1 Use of the ABC-Wood Construction Screws only for:

- Static and quasi-static loads

A.1.2 Base materials

The screws are used for connections in load bearing timber structures between wood-based members or between those members and steel members:

- Solid timber (softwood) according to EN 14081-1[1],
- Glued laminated timber (softwood) according to EN 14080[2],
- Laminated veneer lumber LVL of softwood according to EN 14374[3], arrangement of the screws only perpendicular to the plane of the veneers,
- Glued solid timber (softwood) according to EN 14080 or national provisions that apply at the installation site,
- Cross-laminated timber (softwood) according to European Technical Assessments or national provisions that apply at the installation site.

The screws can be used for connecting the following wood-based panels to the timber members mentioned above:

- Plywood according to EN 636[4] and EN 13986[5],
- Oriented Strand Board, OSB according to EN 300[6] and EN 13986,
- Particleboard according to EN 312[7] and EN 13986,
- Fiberboards according to EN 622-2[8], EN 622-3[9] and EN 13986,
- Cement-bonded particle boards according to EN 634-2[10] and EN 13986,
- Solid-wood panels according to EN 13353[11] and EN 13986.

Wood-based panels are only arranged on the side of the screw head.

ABC-Wood Construction Screws PT-1, ABC-Wood Construction Screws FT-1, ABC-Wood Construction Screws FT-2 and ABC-Wood Construction Screws FT-3 with an outer thread diameter of at least 6 mm are also used for the fixing of thermal insulation material on top of rafters or on wood-based members in vertical façades.

ABC-Wood Construction Screws FT-1, ABC-Wood Construction Screws FT-2 and ABC-Wood Construction Screws FT-3 are also used for compression and tension reinforcing of timber structures perpendicular to the grain.

1	EN 14081-1:2005+A1:2011	Timber structures – Strength graded structural timber with rectangular cross section – Part 1: General requirements
2	EN 14080:2013	Timber structures - Glued laminated timber and glued solid timber - Requirements
3	EN 14374:2004	Timber structures - Structural laminated veneer lumber - Requirements
4	EN 636:2012+A1:2015	Plywood - Specifications
5	EN 13986:2004+A1:2015	Wood-based panels for use in construction - Characteristics, evaluation of conformity and marking
6	EN 300:2006	Oriented strand boards (OSB) – Definition, classification and specifications
7	EN 312:2010	Particleboards - Specifications
8	EN 622-2:2004	Fibreboards – Specifications – Part 2: Requirements for hardboards
9	EN 622-3:2004	Fibreboards - Specifications - Part 3: Requirements for medium boards
10	EN 634-2:2007	Cement-bonded particleboards – Specifications – Part 2: Requirements for OPC bonded particleboards for use in dry, humid and external conditions
11	EN 13353:2008+A1:2011	Solid wood panels (SWP) – Requirements

A.1.3 Use Conditions (environmental conditions)

The corrosion protection of the ABC-Wood Construction Screws is specified in Annex A.2.6. With regards to the use and the environmental conditions, the national provisions of the place of installation apply.

A.1.4 Installation provisions

EN 1995-1-1[12] in conjunction with the respective national annex applies for the installation.

A minimum of two screws shall be used for connections in load bearing timber structures. This does not apply for special situations specified in National Annexes to EN 1995-1-1.

The screws are driven into the wood-based member made of softwood without pre-drilling. The screw holes in steel members are pre-drilled with an adequate diameter greater than the outer thread diameter.

ABC-Wood Construction Screws FT with an outer thread diameter of 13 mm and 14 mm and a length greater or equal than 800 mm are only driven in a guiding hole with a diameter of 7 mm and a minimum length of 80 mm.

If screws with an outer thread diameter $d \geq 8$ mm are driven into the wood-based member without pre-drilling, the structural solid or glued laminated timber, laminated veneer lumber and similar glued members is from spruce, pine or fir.

In the case of fastening battens on thermal insulation material on top of rafters the screws are driven in the rafter through the battens and the thermal insulation material without pre-drilling in one sequence.

Countersunk head screws are used with washers according to Annex 5. After inserting the screw, the washers touch the surface of the wood-based member completely.

By fastening screws in wood-based members the head of the screws is flush with the surface of the wood-based member. For cylinder head screws the head part remains unconsidered.

[12] EN 1995-1-1: 2004+AC:2006+A1:2008+A2:2014 Eurocode 5: Design of timber structures – Part 1-1: General - Common rules and rules for buildings

ANNEX 2 – Characteristic values of the load-carrying capacities

Table A.2.1 Characteristic load-carrying capacities of ABC-Wood Construction Screws

Outer thread diameter [mm]	**3.0**	**3.5**	**4.0**	**4.5**	**5.0**	**6.0**	**8.0**	**10.0**	**12.0**	**13.0**	**14.0**
Characteristic yield moment $M_{y,k}$ [Nm]	1.5	1.9	3.5	3.6	7.2	10.0	20.0	30.0	42.0	60.0	68.0
Characteristic tensile strength $f_{tens,k}$ [kN]	3.2	4.3	5.5	5.9	10.1	12.0	21.0	27.0	36.0	55.0	55.0
Characteristic torsional strength $f_{tor,k}$ [Nm]	1.8	2.6	4.1	4.3	7.7	10.0	24.0	39.0	58.0	95.0	102.0

A.2.1 General

All ABC-Wood Construction Screws achieve a bending angle α of at least $45/d^{0.7} + 20$, where d is the outer thread diameter of the screws.

The minimum penetration length of the threaded part of the screw in the wood-based members l_{ef} shall be

$$l_{ef} = \min \begin{cases} \dfrac{4 \cdot d}{\sin \alpha} \\ 20 \cdot d \end{cases} \qquad (2.1)$$

where

α angle between screw axis and grain direction

d outer thread diameter of the screw.

The outer thread diameter of screws inserted in cross-laminated timber shall be at least 6 mm. The inner thread diameter d_1 of the screws shall be greater than the maximal width of the gaps in the layer of cross laminated timber.

A.2.2 Laterally loaded screws

The outer thread diameter d shall be used as effective diameter of the screw according to EN 1995-1-1.

The embedding strength for the screws in wood-based members or in wood-based panels shall be taken from EN 1995-1-1 or from national provisions that apply at the installation site unless otherwise specified in the following.

A.2.3 Axially loaded screws

A.2.3.1 Slip modulus for mainly axially loaded screws

The axial slip modulus K_{ser} of the threaded part of a screw for the serviceability limit state shall be taken independent of angle α to the grain as:

$$K_{ser} = 780 \cdot d^{0,2} \cdot l_{ef}^{0,4} \quad \text{[N/mm]} \qquad (2.2)$$

Where

d outer thread diameter of the screw [mm]

l_{ef} penetration length of the of the threaded part of the screw in the wood-based member [mm].

A.2.3.2 Axial withdrawal capacity – Characteristic withdrawal parameter

The characteristic withdrawal parameter at an angle α = 90° to the grain based on a associated density of the wood-based member ρ_a of 350 kg/m³ is

$f_{ax,k}$ = 11 N/mm² for screws with 3.0 mm ≤ d ≤ 8 mm and

$f_{ax,k}$ = 10 N/mm² for screws with d ≥ 10 mm.

For LVL a maximum characteristic density of 500 kg/m³ shall be used in equation (8.40a) of EN 1995-1-1.

A.2.3.3 Head pull-through capacity – Characteristic head pull-through parameter

The characteristic value of the head pull-through parameter for ABC-Wood Construction Screws for a characteristic density ρ_a of 350 kg/m³ of the timber and for wood-based panels like

- Plywood according to EN 636 and EN 13986
- Oriented Strand Board, OSB according to EN 300 and EN 13986
- Particleboard according to EN 312 and EN 13986
- Fibreboards according to EN 622-2, EN 622-3 and EN 13986
- Cement-bonded particle boards according to EN 634-2 and EN 13986,
- Solid-wood panels according to EN 13353 and EN 13986

with a thickness of more than 20 mm is

$f_{head,k}$ = 9.4 N/mm² for screws with countersunk or wafer head.

For wood-based panels a maximum characteristic density of 380 kg/m³ and for LVL a maximum characteristic density of 500 kg/m³ shall be used in equation (8.40b) of EN 1995-1-1.

The head diameter shall be equal to or greater than 1.8 · d_s, where d_s is the smooth shank or the inner thread diameter. Otherwise the characteristic head pull-through capacity in equation (8.40b) of EN 1995-1-1 is for all wood-based materials: $F_{ax,\alpha,RK}$ = 0.

For wood-based panels with a thickness 12 mm ≤ t ≤ 20 mm the characteristic value of the head pull-through parameter for the screws is:

$f_{head,k}$ = 8 N/mm²

For wood-based panels with a thickness of less than 12 mm the characteristic head pull-through capacity for screws shall be based on a characteristic value of the head pull-through parameter of 8 N/mm², and limited to 400 N complying with the minimum thickness of the wood-based panels of 1.2·d, with d as outer thread diameter and the values in Table A.2.2.

Table A.2.2 Minimum thickness of wood-based panels

Wood-based panel	**Minimum thickness [mm]**
Plywood	6
Fiberboards (hardboards and medium boards)	6
Oriented Strand Boards, OSB	8
Particleboards	8
Cement-bonded particle board	8
Solid wood Panels	12

For ABC-Wood Construction Screws FT with countersunk or washer head the withdrawal capacity of the thread in the wood-based member with the screw head may be taken into account instead of the head pull-through capacity:

$$F_{ax,\alpha,Rk} = \max \begin{cases} f_{head,k} \cdot d_h^2 \cdot \left(\frac{\rho_k}{350}\right)^{0,8} \\ \frac{f_{ax,k} \cdot d \cdot l_{ef,k}}{1.2 \cdot \cos^2\alpha + \sin^2\alpha} \cdot \left(\frac{\rho_k}{350}\right)^{0,8} \end{cases} \quad (2.3)$$

For ABC-Wood Construction Screws FT with cylinder head the withdrawal capacity of the thread in the wood-based member with the screw head may be taken into account:

$$F_{ax,\alpha,Rk} = \frac{f_{ax,k} \cdot d \cdot l_{ef,k}}{1.2 \cdot \cos^2\alpha + \sin^2\alpha} \cdot \left(\frac{\rho_k}{350}\right)^{0,8} \quad (2.4)$$

where

$f_{head,k}$ characteristic value of the head pull-through capacity of the screw [N/mm²]

$f_{ax,k}$ characteristic value of the axial withdrawal capacity of the threaded part of the screw, $f_{ax,k}$ does not apply for wood-based panels [N/mm²],

d_h diameter of the screw head [mm],

ρ_k characteristic density of the wood-based member with the screw head [kg/m³],

$l_{ef,k}$ penetration length of the threaded part of the screw in the wood-based member with the screw head [mm], $l_{ef,k} \geq 4 \cdot d$

α angle α between screw axis and grain direction, $30° \leq \alpha \leq 90°$.

Outer diameter of washer d_k > 32 mm shall not be considered.

In steel-to-timber connections the head pull-through capacity is not governing.

A.2.3.4 Compressive capacity of ABC-Wood Construction Screws FT - Characteristic yield strength

The design axial capacity $F_{ax,Rd}$ of ABC-Wood Construction Screws FT embedded in solid timber, glued solid timber or glued laminated timber made from softwood with an angle between screw axis and grain direction of 30° ≤ α ≤ 90° is the minimum of the axial resistance against pushing-in and the buckling resistance of the screw.

$$F_{ax,Rd} = \min \left\{ f_{ax,d} \cdot d \cdot l_{ef} ;\ \kappa_c \cdot N_{pl,d} \right\} \quad (2.5)$$

$f_{ax,d}$ design value of the axial withdrawal capacity of the threaded part of the screw [N/mm²]

d outer thread diameter of the screw [mm]

l_{ef} penetration length of the threaded part of the screw in the timber member [mm]

$$\kappa_c = 1 \qquad \text{für } \bar{\lambda}_k \le 0{,}2 \quad (2.6)$$

$$\kappa_c = \frac{1}{k + \sqrt{k^2 - \bar{\lambda}_k^2}} \qquad \text{für } \bar{\lambda}_k > 0{,}2 \quad (2.7)$$

$$k = 0{,}5 \cdot \left[1 + 0{,}49 \cdot \left(\bar{\lambda}_k - 0{,}2 \right) + \bar{\lambda}_k^2 \right] \quad (2.8)$$

and a relative slenderness ratio $\bar{\lambda}_k = \sqrt{\frac{N_{pl,k}}{N_{ki,k}}}$ (2.9)

where:

$N_{pl,k}$ characteristic plastic normal force related to the net cross-section of the inner thread diameter: $N_{pl,k} = \pi \cdot \frac{d_1^2}{4} \cdot f_{y,k}$ (2.10)

$f_{y,k}$ characteristic yield strength,
$f_{y,k}$ = 900 N/mm² for ABC-Wood Construction Screws FT with d ≥ 12 mm and
$f_{y,k}$ = 1000 N/mm² for ABC-Wood Construction Screws FT with 6 mm ≤ d ≤ 10 mm

d_1 inner thread diameter of the screw [mm]

$$N_{pl,d} = \frac{N_{pl,k}}{\gamma_{M1}} \quad (2.11)$$

γ_{M1} partial factor according to EN 1993-1-1 in conjunction with the particular national annex

Characteristic ideal elastic buckling load:

$$N_{ki,k} = \sqrt{c_h \cdot E_S \cdot I_S} \quad [N] \quad (2.12)$$

Elastic foundation of the screw:

$$c_h = \left(0{,}19 + 0{,}012 \cdot d\right) \cdot \rho_k \cdot \left(\frac{90° + \alpha}{180°} \right) \quad [N/mm^2] \quad (2.13)$$

ρ_k characteristic density of the wood-based member [kg/m³],
α angle between screw axis and grain direction, 30° ≤ α ≤ 90°

Modulus of elasticity:

E_s = 210000 N/mm²

Second moment of area:

$$I_s = \frac{\pi \cdot d_1^4}{64} \quad [mm^4] \quad (2.14)$$

A.2.4 Spacing, end and edge distances of the screws and minimum thickness of the wood-based material

A.2.4.1 Laterally and/or axially loaded screws

Screws in non pre-drilled holes

For ABC-Wood Construction Screws minimum spacing and distances are given in EN 1995-1-1, clause 8.3.1.2 and Table 8.2 as for nails in non-predrilled holes. Here, the outer thread diameter d shall be considered.

Minimum thickness for structural members made from solid timber, glued laminated timber, glued solid timber, laminated veneer lumber and cross laminated timber is t = 30 mm for screws with d ≤ 8 mm, t = 40 mm for screws with d = 10 mm and t = 100 mm for screws with d ≥ 12 mm, if the spacing parallel to the grain and the end distance is at least 25 d. In all other cases minimum thicknesses for ABC-Wood Construction Screws in non-predrilled softwood timber members are given in EN 1995-1-1, clause 8.3.1.2 as for nails in non-predrilled holes.

For Douglas fir members minimum spacing and distances parallel to the grain shall be increased by 50 %.

Minimum distances from loaded or unloaded ends shall be at least 15·d for screws with outer thread diameter d ≥ 8 mm and timber thickness t < 5·d.

Minimum distances from the unloaded edge perpendicular to the grain may be reduced to 3·d also for timber thickness t < 5·d, if the spacing parallel to the grain and the end distance is at least 25·d.

A.2.4.2 Only axially loaded screws

For ABC-Wood Construction Screws the minimum spacings, end and edge distances are given in EN 1995-1-1, clause 8.3.1.2 and Table 8.2 as for nails in non-predrilled holes and clause 8.7.2, Table 8.6.

A.2.5 Insertion moment

The ratio between the characteristic torsional strength $f_{tor,k}$ and the mean value of insertion moment $R_{tor,mean}$ fulfills the requirement for all screws.

A.2.6 Durability against corrosion

Screws and washers made from carbon steel may have the coatings according to Table A.2.3

Table A.2.3 Coatings of the ABC-Wood Construction Screws

Coating		**Minimum thickness of the coating [µm]**
Electrogalvanized	Yellow chromated	3
	Brown chromated	
	Black chromated	
	Blue passivated	
Nickel-plated		5
Zinc-nickel coating		5
Zinc flake coating		25
VG Coating		25

ANNEX 3 - Compression reinforcement perpendicular to the grain (informative)

A.3.1 General

Only ABC-Wood Construction Screws FT shall be used for compression reinforcement perpendicular to the grain. The provisions are valid for reinforcing timber members made from solid timber, glued solid timber or glued laminated timber made from softwood.

The compression force shall evenly be distributed to the screws used as compression reinforcement.

The screws are driven into the timber member perpendicular to the contact surface under an angle between the screw axis and the grain direction of 45° to 90°. The screw heads shall be flush with the timber surface.

A.3.2 Design

For the design of reinforced contact areas the following conditions shall be met independently of the angle between the screw axis and the grain direction.

The design resistance of a reinforced contact area is:

$$R_{90,d} = \min \begin{Bmatrix} k_{c,90} \cdot B \cdot \ell_{ef,1} \cdot f_{c,90,d} + n \cdot \min\{R_{ax,d}; \kappa_c \cdot N_{pl,d}\} \\ B \cdot \ell_{ef,2} \cdot f_{c,90,d} \end{Bmatrix} \quad (3.1)$$

where:

$k_{c,90}$ parameter according to EN 1995-1-1, clause 6.1.5

B bearing width [mm]

$\ell_{ef,1}$ effective contact length according to EN 1995-1-1, clause 6.1.5 [mm]

$f_{c,90,d}$ design compressive strength perpendicular to the grain [N/mm²]

n number of reinforcing screws, $n = n_0 \cdot n_{90}$

n_0 number of reinforcing screws arranged in a row parallel to the grain

n_{90} number of reinforcing screws arranged in a row perpendicular to the grain

$$R_{ax,d} = f_{ax,d} \cdot d \cdot \ell_{ef} \text{ [N]} \quad (3.2)$$

$f_{ax,d}$ design value of the axial withdrawal capacity of the threaded part of the screw [N/mm²]

d outer thread diameter of the screw [mm]

κ_c according to Annex A.2.3.3

$N_{pl,d}$ according to Annex A.2.3.3 [N]

$\ell_{ef,2}$ effective contact length in the plane of the screw tips (see Figure A.3.1) [mm]

$\ell_{ef,2} = \{\ell_{ef} + (n_0 - 1) \cdot a_1 + \min(\ell_{ef}\ ;\ a_{1,CG})\}$ for end supports (see Figure A.3.1 left)

$\ell_{ef,2} = \{2 \cdot \ell_{ef} + (n_0 - 1) \cdot a_1\}$ for intermediate supports (see Figure A.3.1 right)

ℓ_{ef} threaded length of the screw in the timber member [mm]

a_1 Spacing a_1 in a plane parallel to grain, see chapter A.2.4.2 [mm]

$a_{1,CG}$ End distance of the centre of gravity of the threaded part in the timber member, see chapter A.2.4.2 [mm]

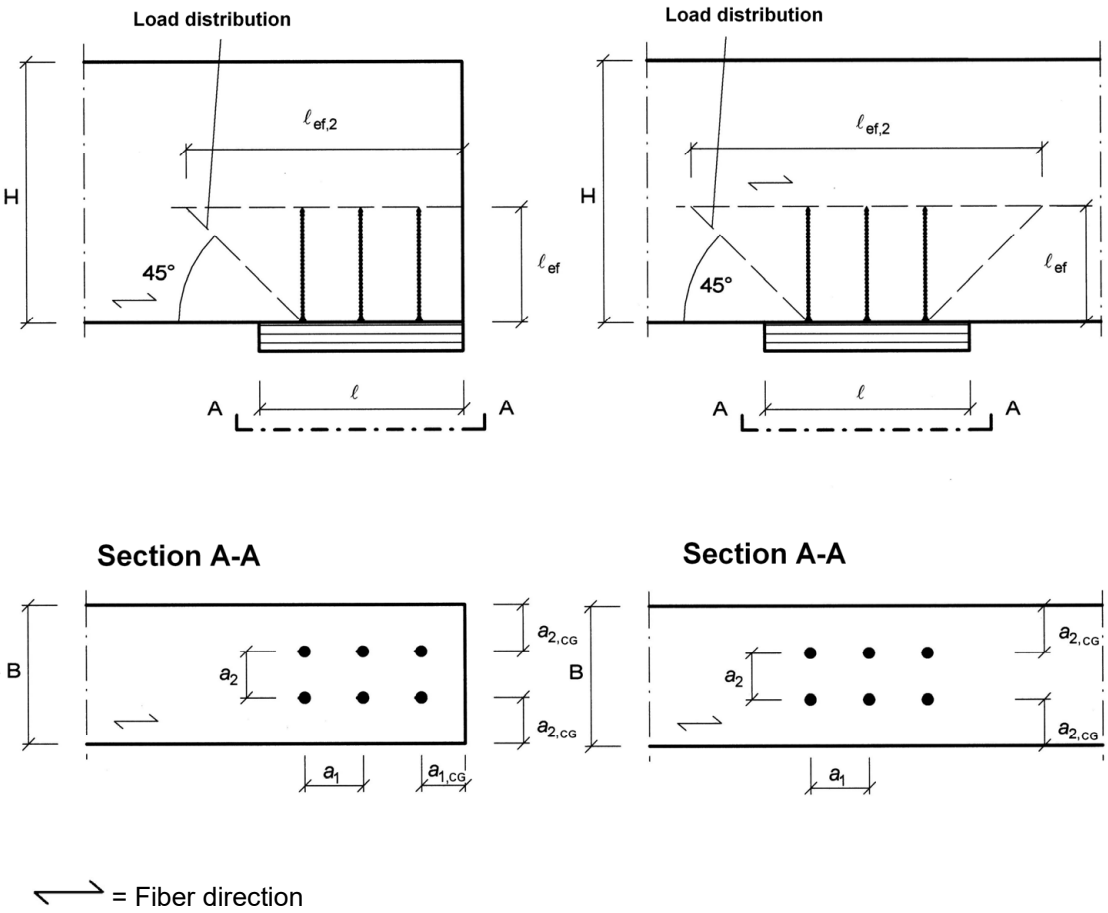

Figure A.3.1: Reinforced end support (left) and reinforced intermediate support (right)

ABC-Wood Construction Screws	Annex 3
Compression reinforcement perpendicular to the grain	

ANNEX 4 - Fastening of thermal insulation material on top of rafters (informative)

A.4.1 General

ABC-Wood Construction Screws with an outer thread diameter of at least 6 mm may be used for the fixing of thermal insulation material on top of rafters or on wood-based members in vertical façades. In the following, the meaning of the word rafter includes wood-based members with inclinations between 0° and 90°.

The thickness of the thermal insulation material may be up to 300 mm. The thermal insulation material shall be applicable as insulation on top of rafters or for façades according to national provisions that apply at the installation site.

The battens have to be from solid timber according to EN 338/EN 14081-1. The minimum thickness t and the minimum width b of the battens are given in table A.4.1:

Table A.4.1 Minimum thickness and minimum width of the battens

Outer thread diameter [mm]	Minimum thickness t [mm]	Minimum width b [mm]
6 and 8	30	50
10	40	60
12, 13 and 14	80	100

Instead of battens the wood-based panels specified in chapter A.4.2.1 may be used. Only screws with countersunk head shall be used for fixing wood-based panels on rafters with thermal insulation material as interlayer.

The minimum width of the rafters shall be 60 mm.

The spacing between screws shall be not more than 1.75 m.

Friction forces shall not be considered for the design of the characteristic axial load of the screws.

The anchorage of wind suction forces as well as the bending stresses of the battens shall be considered for design. Screws perpendicular to the grain of the rafter (angle α = 90 °) may be arranged where required considering the design of the battens.

A.4.2 Parallel inclined screws and thermal insulation material in compression

A.4.2.1 Mechanical model

The system of rafter, thermal insulation material on top of rafter and counter battens parallel to the rafter may be considered as a beam on elastic foundation. The counter batten represents the beam, and the thermal insulation material on top of the rafter the elastic foundation. The minimum compressive stress of the thermal insulation material at 10 % deformation, measured according to EN 826[13], shall be $\sigma_{(10\,\%)}$ = 0.05 N/mm². The counter batten is loaded perpendicular to the axis by point loads F_b transferred by regularly spaced battens. Further point loads F_s are caused by the shear load of the roof due to dead and snow load, which are transferred from the screw heads into the counter battens.

Instead of battens the following wood-based panels may be used to cover the thermal insulation material if they are suitable for that use:

- Plywood according to EN 636 and EN 13986,
- Oriented Strand Board, OSB according to EN 300 and EN 13986,
- Particleboard according to EN 312 and EN 13986
- Fiberboards according to EN 622-2, EN 622-3 and EN 13986.

The minimum thickness of the wood-based panels shall be 22 mm.

The word batten includes the meaning of wood-based panels in the following.

[13] EN 826:2013 Thermal insulating products for building applications - Determination of compression behaviour

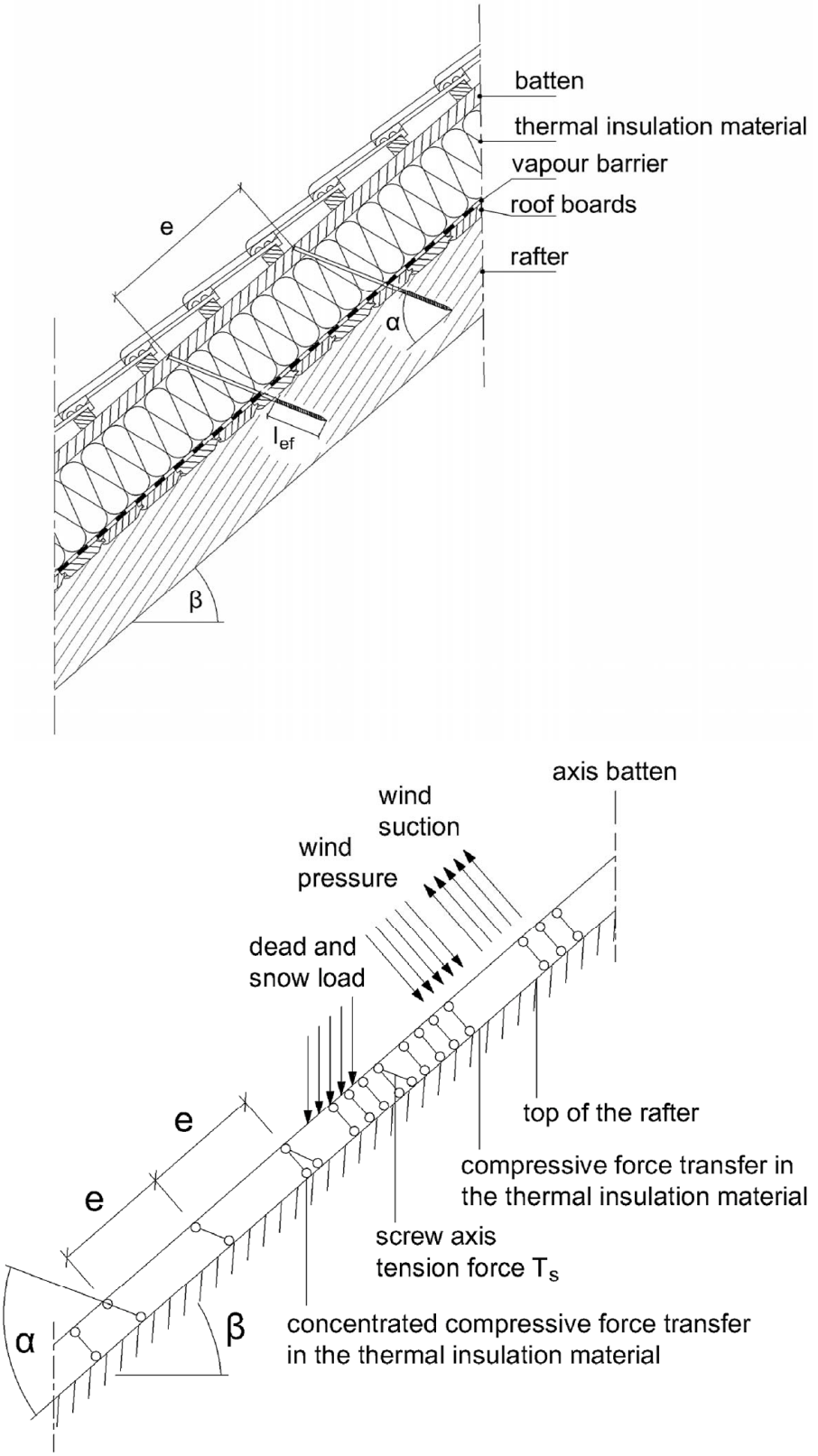

Figure A.4.1 Fastening of the thermal insulation material on top of rafters - structural system

ABC-Wood Construction Screws	Annex 4
Fastening of thermal insulation material on top of rafters	

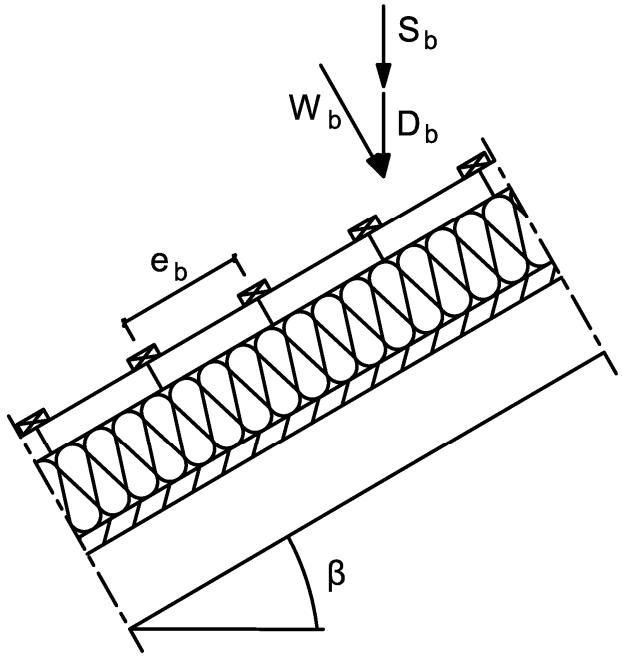

Figure A.4.2 Point loads F_b perpendicular to the battens

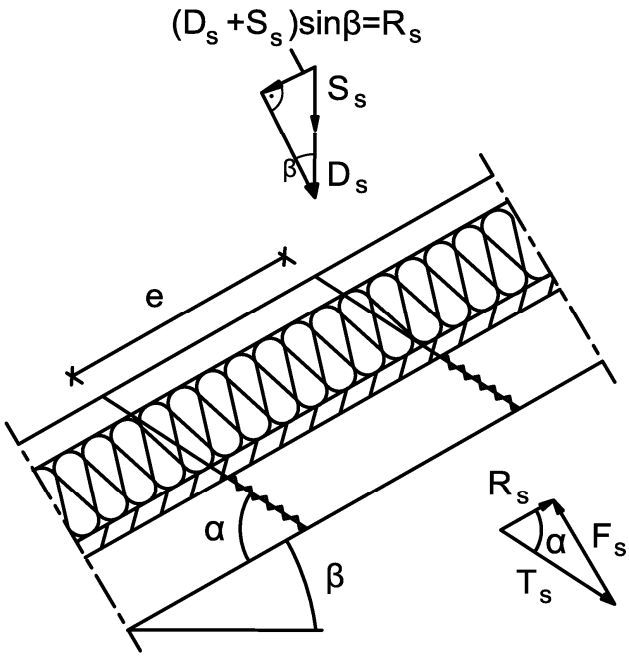

Figure A.4.3 Point loads F_s perpendicular to the battens, load application in the area of the screw heads

ABC-Wood Construction Screws	Annex 4
Fastening of thermal insulation material on top of rafters	

A.4.2.2 Design of the battens

It's assumed that the spacing between the counter battens exceeds the characteristic length l_{char}.

The characteristic values of the bending stresses are calculated as:

$$M_k = \frac{(F_b + F_s) \cdot l_{char}}{4} \tag{4.1}$$

where (4.2)

l_{char} = characteristic length $l_{char} = \sqrt[4]{\frac{4 \cdot EI}{w_{ef} \cdot K}}$

EI = bending stiffness of the batten

K = coefficient of subgrade

w_{ef} = effective width of the thermal insulation material

$F_{b,k}$ = point loads perpendicular to the battens

$F_{s,k}$ = point loads perpendicular to the battens, load application in the area of the screw heads

The coefficient of subgrade K may be calculated from the modulus of elasticity E_{HI} and the thickness t_{HI} of the thermal insulation material if the effective width w_{ef} of the thermal insulation material under compression is known. Due to the load extension in the thermal insulation material the effective width w_{ef} is greater than the width of the batten or rafter, respectively. For further calculations, the effective width w_{ef} of the thermal insulation material may be determined according to:

$$w_{ef} = w + t_{HI}/2 \tag{4.3}$$

where

w = minimum from width of the batten or rafter, respectively

t_{HI} = thickness of the thermal insulation material

$$K = \frac{E_{HI}}{t_{HI}} \tag{4.4}$$

The following condition shall be satisfied:

$$\frac{\sigma_{m,d}}{f_{m,d}} = \frac{M_d}{W \cdot f_{m,d}} \leq 1 \tag{4.5}$$

For the calculation of the section modulus W the net cross section shall be considered.

The characteristic values of the shear stresses shall be calculated according to:

$$V_k = \frac{(F_b + F_s)}{2} \tag{4.6}$$

The following condition need to be satisfied:

$$\frac{\tau_d}{f_{v,d}} = \frac{1.5 \cdot V_d}{A \cdot f_{v,d}} \leq 1 \tag{4.7}$$

For the calculation of the cross section area the net cross section shall be considered.

A.4.2.3 Design of the thermal insulation material

The characteristic value of the compressive stresses in the thermal insulation material shall be calculated according to:

$$\sigma_k = \frac{1.5 \cdot F_{b,k} + F_{s,k}}{2 \cdot l_{char} \cdot w} \tag{4.8}$$

The design value of the compressive stress shall not be greater than 110 % of the compressive strength at 10 % deformation calculated according to EN 826.

A.4.2.4 Design of the screws

The screws are loaded predominantly axial. The characteristic value of the axial tension force in the screw may be calculated from the shear loads of the roof R_s:

$$T_{S,k} = \frac{R_{S,k}}{\cos\alpha} \tag{4.9}$$

The load-carrying capacity of axially loaded screws is the minimum design value of the axial withdrawal capacity of the threaded part of the screw, the head pull-through capacity of the screw and the tensile capacity of the screw according to Annex 2.

In order to limit the deformation of the screw head for thermal insulation material with thickness over 220 mm or with compressive strength below 0.12 N/mm², respectively, the axial withdrawal capacity of the screws shall be reduced by the factors k_1 and k_2:

$$F_{ax,\alpha,Rd} = \min\left\{\frac{f_{ax,d} \cdot d \cdot l_{ef} \cdot k_1 \cdot k_2}{1.2 \cdot \cos^2\alpha + \sin^2\alpha} \cdot \left(\frac{\rho_k}{350}\right)^{0.8}; f_{head,d} \cdot d_h^2 \cdot \left(\frac{\rho_k}{350}\right)^{0.8}; \frac{f_{tens,k}}{\gamma_{M2}}\right\} \tag{4.10}$$

where:

$f_{ax,d}$	design value of the axial withdrawal parameter of the threaded part of the screw [N/mm²]
d	outer thread diameter of the screw [mm]
l_{ef}	penetration length of the threaded part of the screw in the rafter [mm], $l_{ef} \geq 40$ mm
ρ_k	characteristic density of the wood-based member [kg/m³], for LVL the assumed characteristic density shall not exceed 500 kg/m³
α	angle α between screw axis and grain direction, $30° \leq \alpha \leq 90°$
$f_{head,d}$	design value of the head pull-through parameter of the screw [N/mm²]
d_h	head diameter of the screw [mm]
$f_{tens,k}$	characteristic tensile capacity of the screw according to Annex 2 [N]
γ_{M2}	partial factor according to EN 1993-1-1 in conjunction with the particular national annex
k_1	min {1; 220/t_{HI}}
k_2	min {1; $\sigma_{10\%}$/0.12}
t_{HI}	thickness of the thermal insulation material [mm]
$\sigma_{10\%}$	compressive stress of the thermal insulation material under 10 % deformation [N/mm²]

If equation (4.10) is fulfilled, the deflection of the battens does not need to be considered when designing the load-carrying capacity of the screws.

1) ABC-Wood Construction Screws (all kinds without ABC-Wood Construction Screws FT)

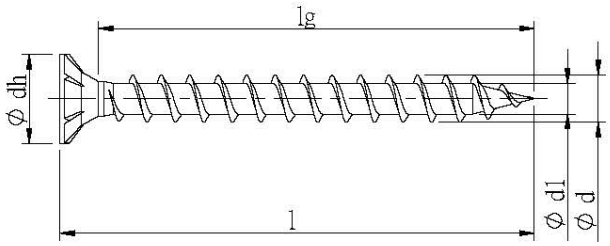

Full thread without drilling tip

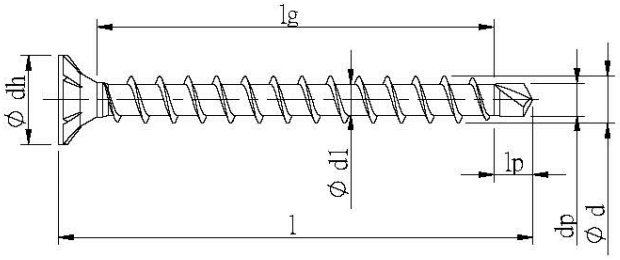

Full thread with drilling tip

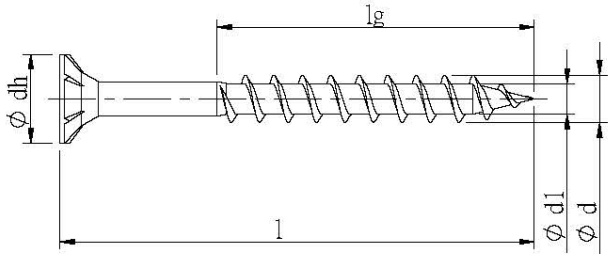

Partial thread without drilling tip

2) All ABC-Wood Construction Screws ,can be like on the drawing (I)or without thread below head (II)
The thread lengths can be manufactured to customer specific within 4 x d and lg max.

(I)

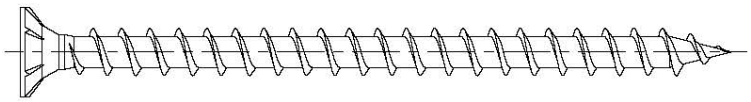

(II)

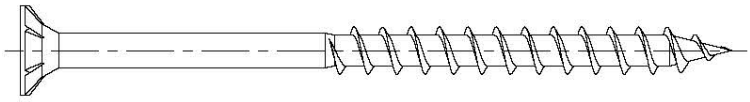

Possible Surface Coatings: Blank, Nickel-Plated, Browned, Black Zinc Chromated, Yellow Zinc Chromated, Blue Passivated Zinc-Nickel Coating, Zinc Flake, VG Coating.

ABC-Wood Construction Screws PT-1, ABC- Wood Construction Screws FT-1, ABC- Wood Construction Screws FT-2, ABC- Wood Construction Screws FT-3	Annex 5.1
General description	

Head Types for d=3.0 mm

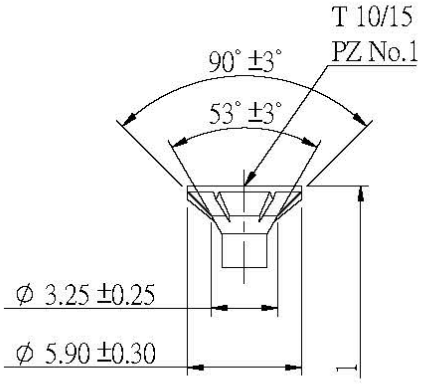

Countersunk Head with cutter ribs - design with and without raise

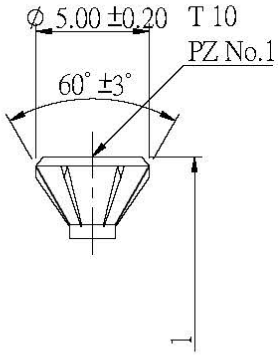

Single Countersunk Head design with and without raise

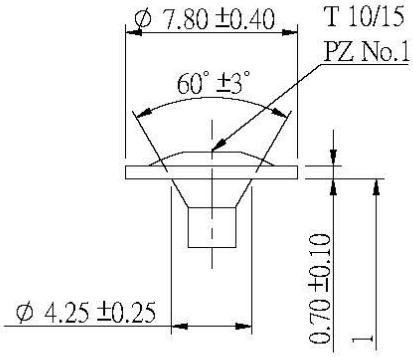

Washer Head

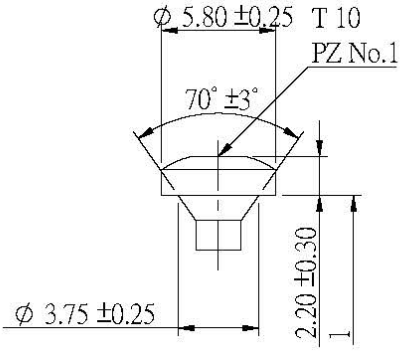

Pan Head

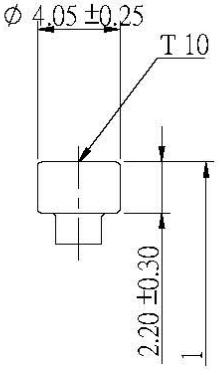

Cylinder Head

ABC-Wood Construction Screws PT-1	Annex 5.2
Screws with d = 3 mm	

Thread Types d=3.0 mm

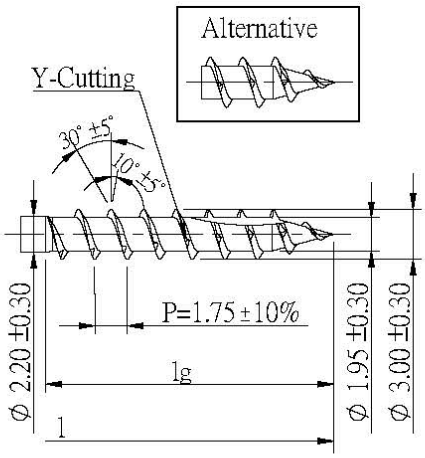

PT-1

Length for d = 3.0 mm

l	lg
16~30 (±1.5 mm)	12~20 (±1.5 mm)
30~50 (±2.0 mm)	

The thread lengths can be manufactured to customer specific within lg min and lg max.
All dimensions in mm.

ABC-Wood Construction Screws PT-1	Annex 5.3
Screws with d = 3 mm	

Head Types for d=3.5 mm

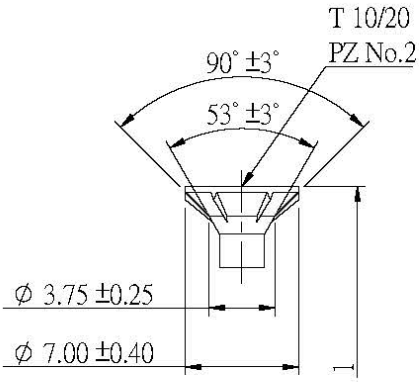

Countersunk Head with cutter ribs - design with and without raise

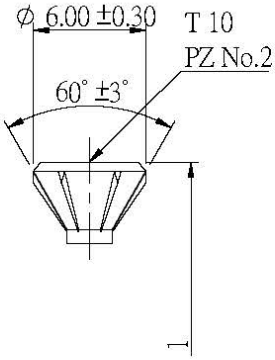

Single Countersunk Head design with and without raise

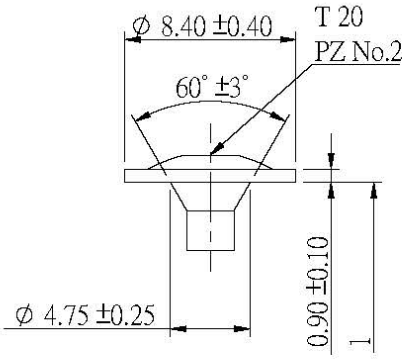

Washer Head

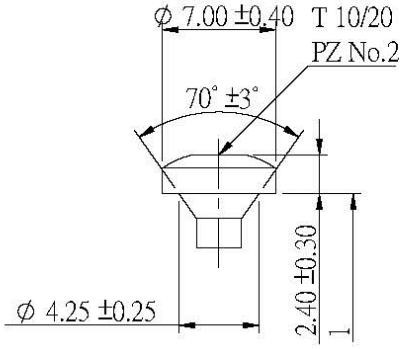

Pan Head

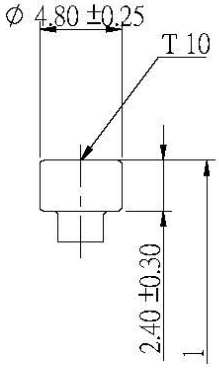

Cylinder Head

ABC-Wood Construction Screws PT-1

Screws with d = 3.5 mm

Annex 5.4

Thread Types d=3.5 mm

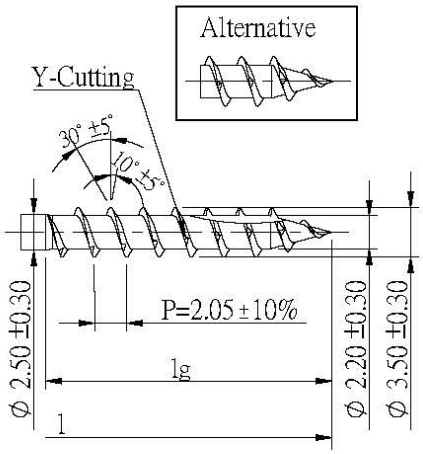

PT-1

Length for d = 3.5 mm

l	lg
18~30 (±1.5 mm)	14~30 (±1.5 mm)
30~50 (±2.0 mm)	

The thread lengths can be manufactured to customer specific within lg min and lg max.
All dimensions in mm.

ABC-Wood Construction Screws PT-1	Annex 5.5
Screws with d = 3.5 mm	

Head Types for d=4.0 mm

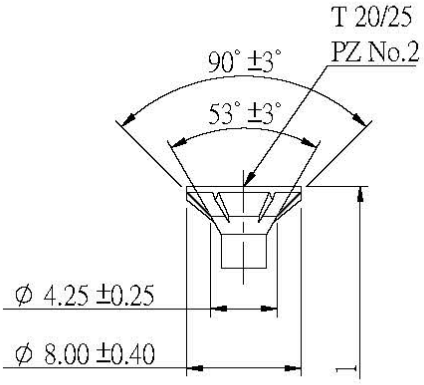

Countersunk Head with cutter ribs - design with and without raise

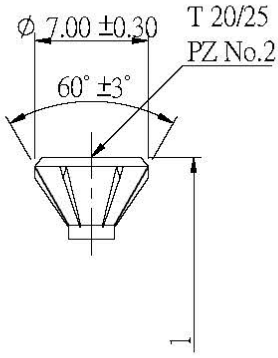

Single Countersunk Head design with and without raise

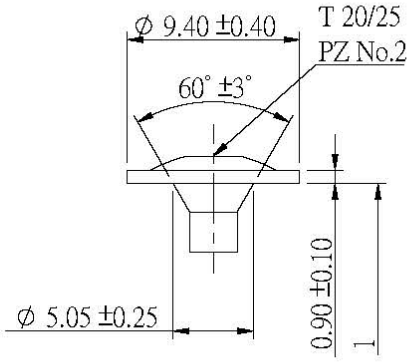

Washer Head

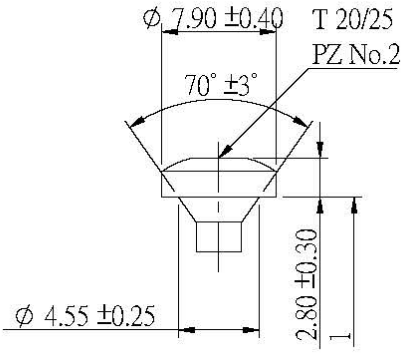

Pan Head

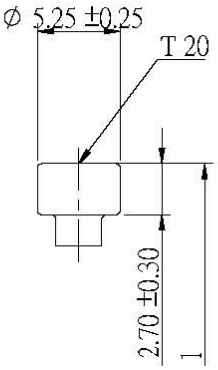

Cylinder Head

ABC-Wood Construction Screws PT-1	Annex 5.6
Screws with d = 4 mm	

Thread Types d=4.0 mm

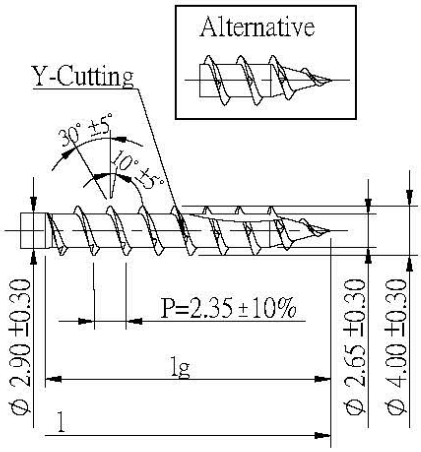

PT-1

Length for d = 4.0 mm

l	lg
20~30 (±1.5 mm)	16~35 (±1.5 mm)
30~50 (±2.0 mm)	
50~80 (±2.3 mm)	

The thread lengths can be manufactured to customer specific within lg min and lg max.
All dimensions in mm.

ABC-Wood Construction Screws PT-1	Annex 5.7
Screws with d = 4 mm	

Head Types for d=4.5 mm

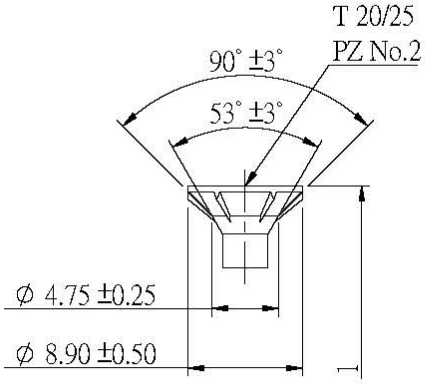

Countersunk Head with cutter ribs - design with and without raise

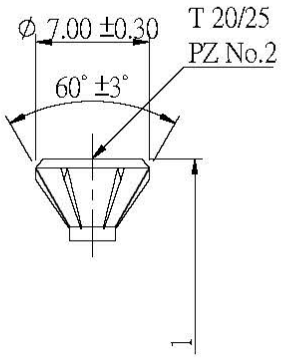

Single Countersunk Head design with and without raise

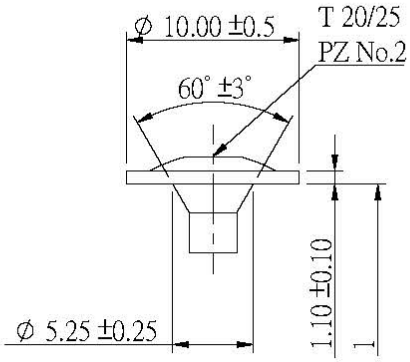

Washer Head

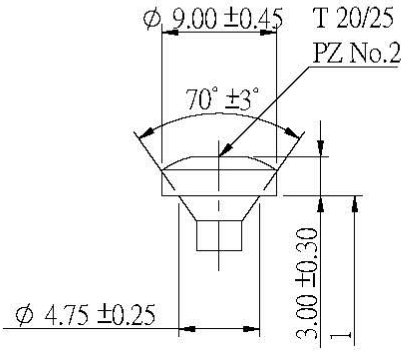

Pan Head

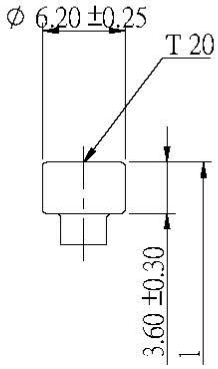

Cylinder Head

ABC-Wood Construction Screws PT-1	Annex 5.8
Screws with d = 4.5 mm	

Thread Types d=4.5 mm

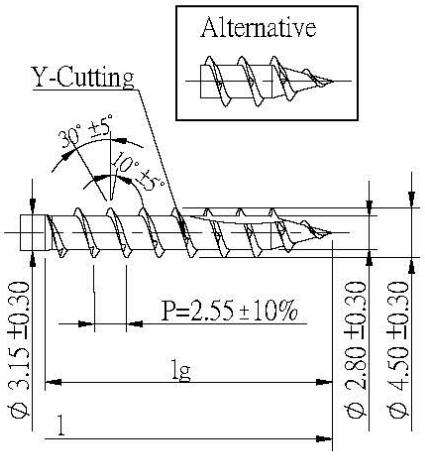

PT-1

Length for d = 4.5 mm

l	lg
22~30 (±1.5 mm)	18~47 (±1.5 mm)
30~50 (±2.0 mm)	
50~100 (±2.3 mm)	

The thread lengths can be manufactured to customer specific within lg min and lg max.
All dimensions in mm.

ABC-Wood Construction Screws PT-1	Annex 5.9
Screws with d = 4.5 mm	

Head Types for d=5.0 mm

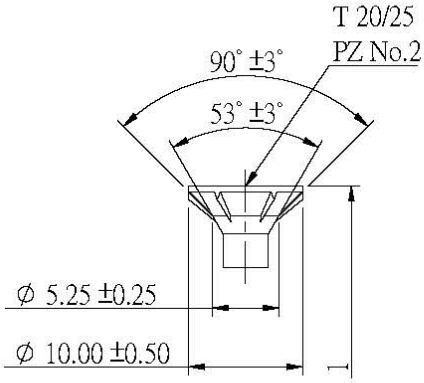

Countersunk Head with cutter ribs - design with and without raise

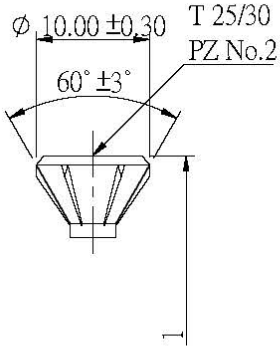

Single Countersunk Head design with and without raise

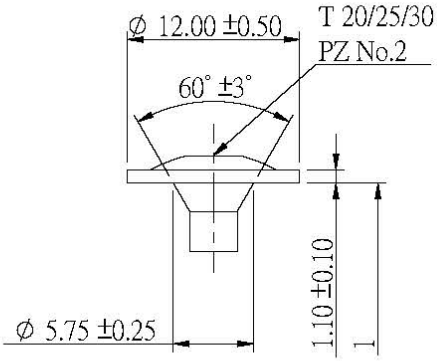

Washer Head

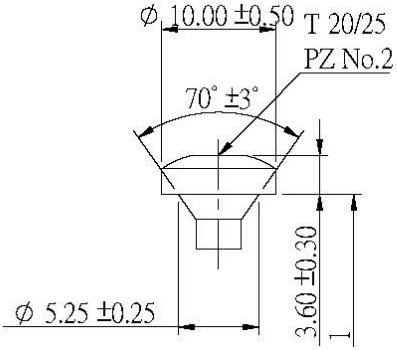

Pan Head

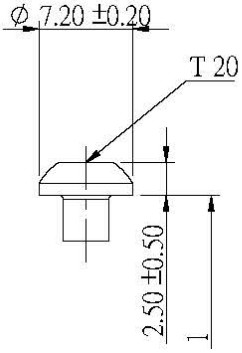

Angle Bracket Head

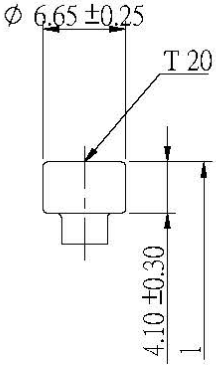

Cylinder Head

ABC-Wood Construction Screws PT-1	Annex 5.10
Screws with d = 5 mm	

Thread Types d=5.0 mm

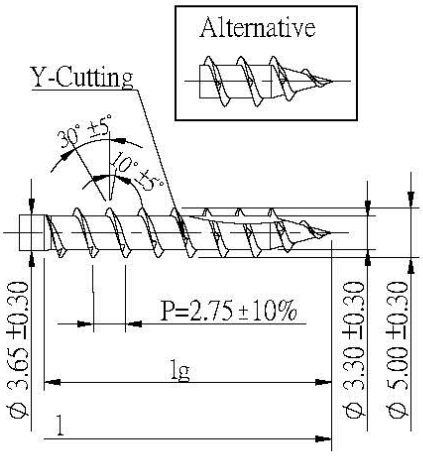

PT-1

Length for d = 5.0 mm

l	lg	Shank cutter at partial thread
40~50 (±2.0 mm)	27~60 (±1.5 mm)	up to L=40: optional
50~80 (±2.3 mm)		over L=40 : yes
80~120 (±2.7 mm)		

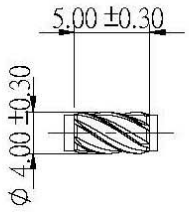

Shank cutter

The thread lengths can be manufactured to customer specific within lg min and lg max.
All dimensions in mm.

ABC-Wood Construction Screws PT-1	Annex 5.11
Screws with d = 5 mm	

Head Types for d=6.0 mm

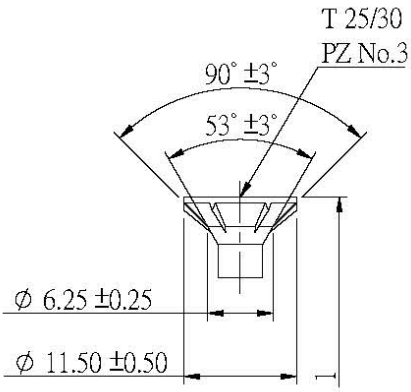

Countersunk Head with cutter ribs - design with and without raise

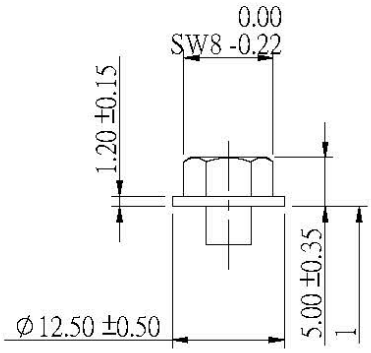

Hex Washer Head

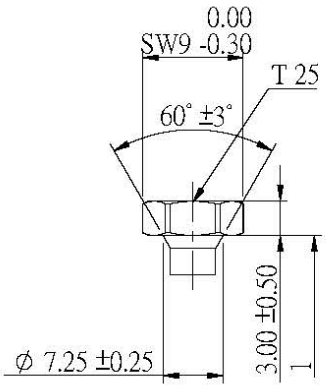

Hexagonal T-Star Head

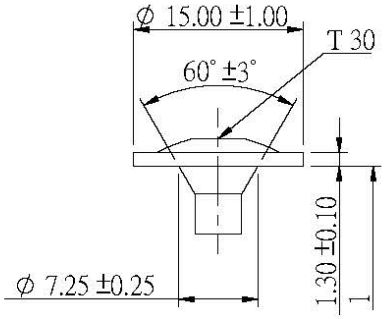

Washer Head

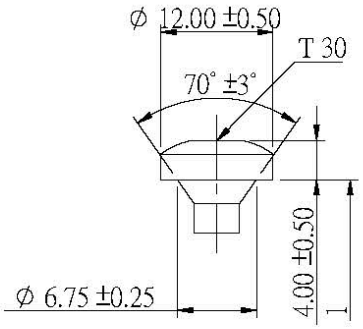

Pan Head

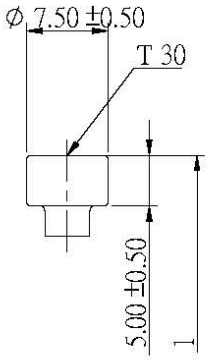

Cylinder Head

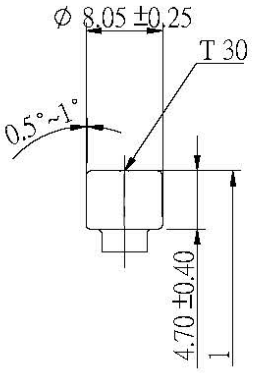

Wide Cylinder Head

ABC-Wood Construction Screws PT-1	Annex 5.12
Screws with d = 6 mm	

Thread Types d=6.0 mm

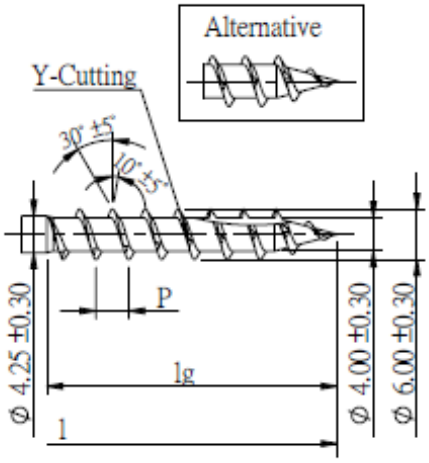

PT-1

Length for d = 6.0 mm

l	lg	Shank cutter at partial thread	P	
40~80 (±2.0 mm)	32~75 (±2.3 mm)	up to L=80: optional	L < 180 3.3 L ≥ 180 4.5	±10%
80~120 (±2.7 mm)		over L=80 : yes		
120~180 (±3.2mm)				
180~250 (±3.6mm)				
250~300 (±4.1mm)				

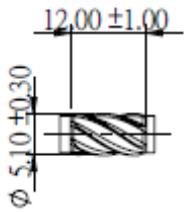

Shank cutter

The thread lengths can be manufactured to customer specific within lg min and lg max.
All dimensions in mm.

ABC-Wood Construction Screws PT-1	Annex 5.13
Screws with d = 6 mm	

Head Types for d=8.0 mm

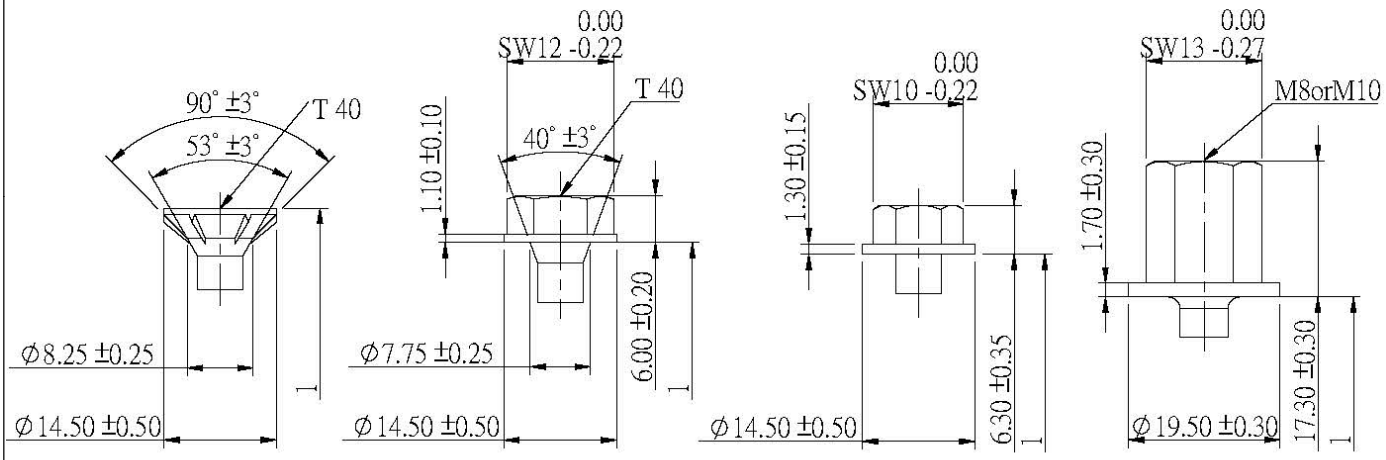

Countersunk Head with cutter ribs - design with and without raise

Hex Washer T-Star Head

Hex Washer Head

Coupler Head

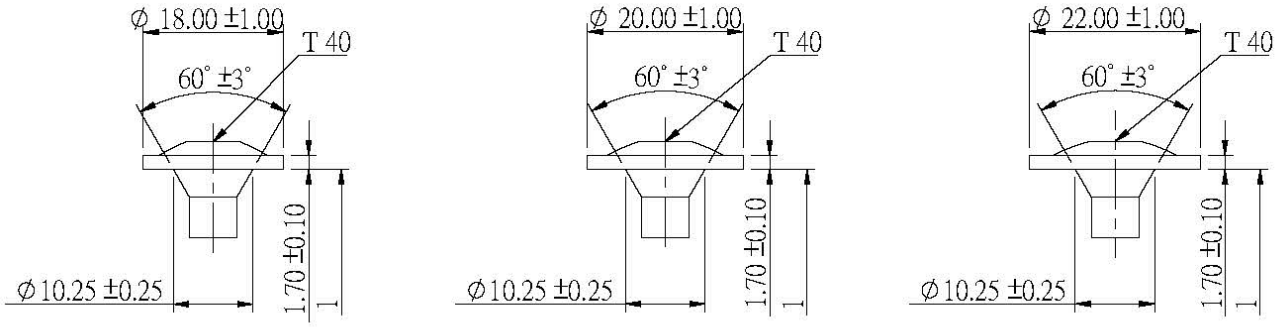

Small Washer Head

Medium Washer Head

Large Washer Head

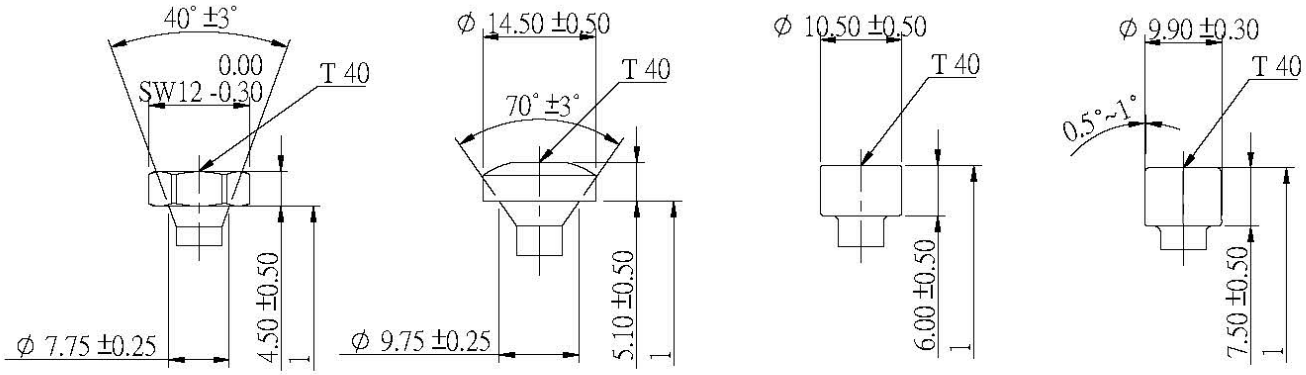

Hexagonal T-Star Head

Pan Head

Cylinder Head

Long Cylinder Head

ABC-Wood Construction Screws PT-1	Annex 5.14
Screws with d = 8 mm	

Thread Types d=8.0 mm

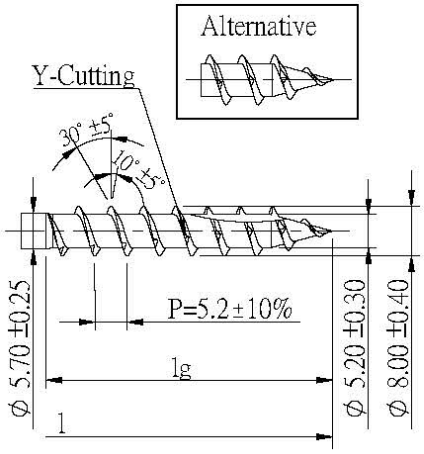

PT-1

Length for d = 8.0 mm

l	lg	Shank cutter at partial thread
40~80 (±2.0 mm)	32~100 (±2.0 mm)	up to L=80: optional
80~120 (±2.7 mm)		over L=80 : yes
120~180 (±3.2 mm)		
180~250 (±3.6 mm)		
250~315 (±4.1 mm)		
315~400 (±4.5 mm)		
400~500 (±4.9 mm)		
500~600 (±5.5 mm)		

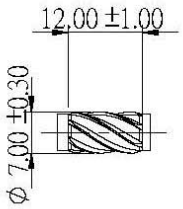

Shank cutter

The thread lengths can be manufactured to customer specific within lg min and lg max.
All dimensions in mm.

ABC-Wood Construction Screws PT-1	Annex 5.15
Screws with d = 8 mm	

Head Types for d=10.0 mm

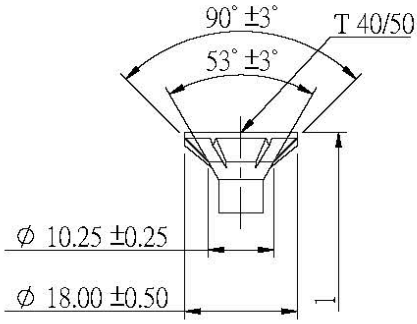

Countersunk Head with cutter ribs - design with and without raise

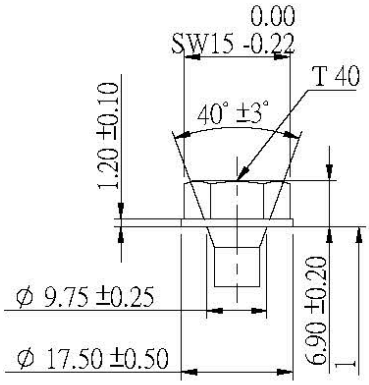

Hex Washer T-Star Head

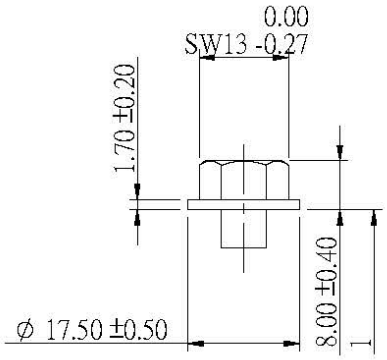

Hex Washer Head

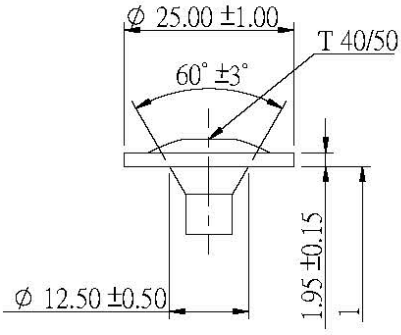

Washer Head

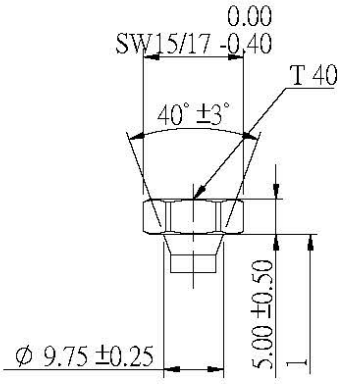

Hexagonal T-Star Head

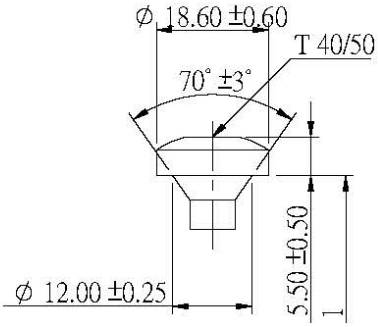

Pan Head

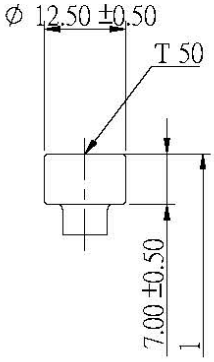

Cylinder Head

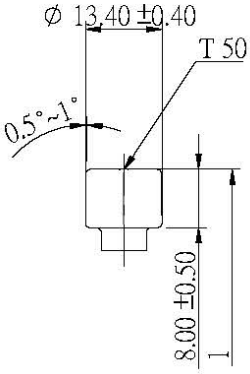

Long Cylinder Head

ABC-Wood Construction Screws PT-1	Annex 5.16
Screws with d = 10 mm	

Deutsches Institut für Bautechnik DIBt

Thread Types d=10.0 mm

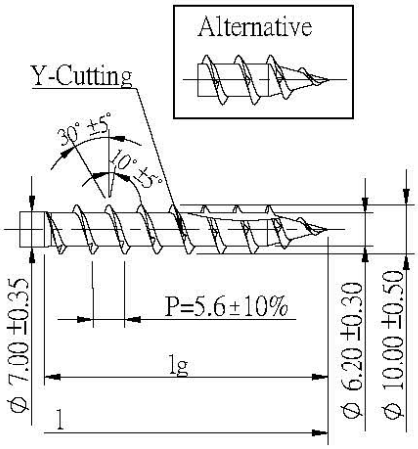

PT-1

Length for d = 10.0 mm

l	lg	Shank cutter at partial thread
80~120 (±2.7 mm)	52~100 mm (±2.0 mm)	up to L=80: optional
120~180 (±3.2 mm)		over L=80 : yes
180~250 (±3.6 mm)		
250~315 (±4.1 mm)		
315~400 (±4.5 mm)		
400~500 (±4.9 mm)		
500~600 (±5.5 mm)		

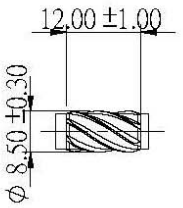

Shank cutter

The thread lengths can be manufactured to customer specific within lg min and lg max.
All dimensions in mm.

ABC-Wood Construction Screws PT-1	Annex 5.17
Screws with d = 10 mm	

Head Types for d=12.0 mm

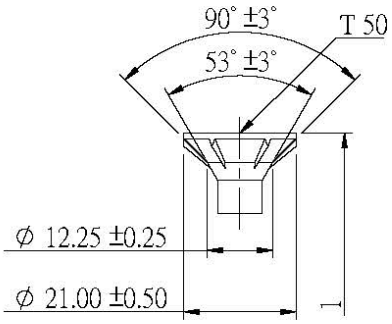

Countersunk Head with cutter ribs - design with and without raise

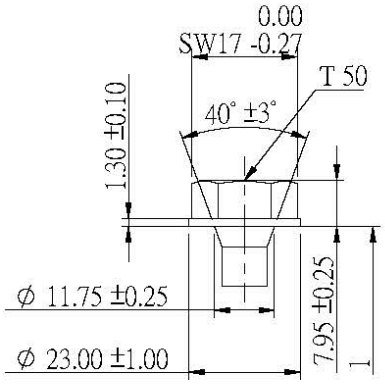

Hex Washer T-Star Head

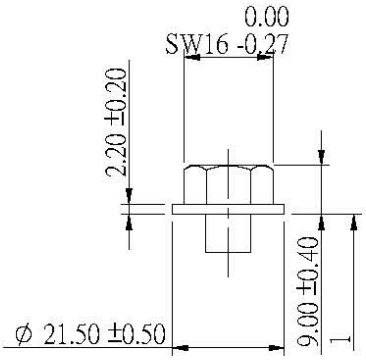

Hex Washer Head

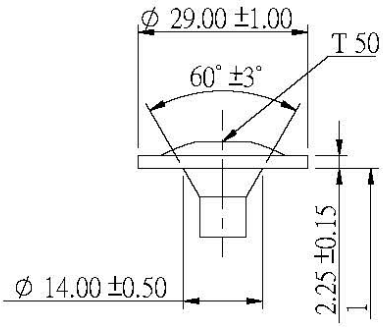

Washer Head

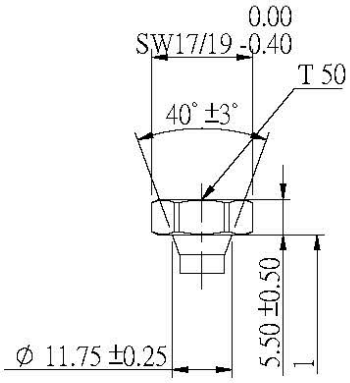

Hexagonal T-Star Head

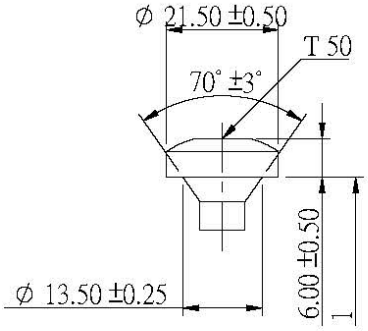

Pan Head

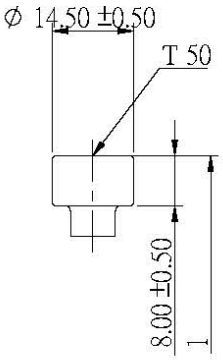

Cylinder Head

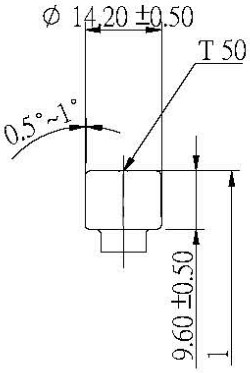

Long Cylinder Head

ABC-Wood Construction Screws PT-1	Annex 5.18
Screws with d = 12 mm	

Thread Types d=12.0 mm

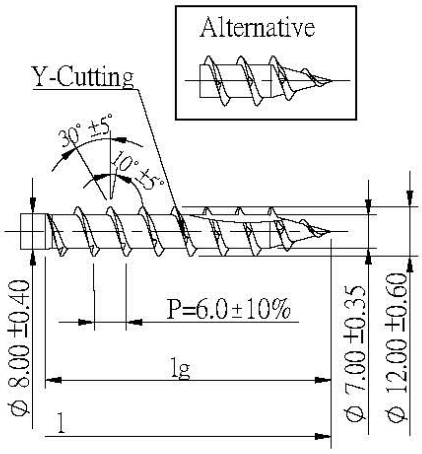

PT-1

Length for d = 12.0 mm

l	lg	Shank cutter at partial thread
120~180 (±3.2 mm)	80~120 mm (±2.0 mm)	up to L=120: optional
180~250 (±3.6 mm)		over L=120 : yes
250~315 (±4.1 mm)		
315~400 (±4.5 mm)		
400~500 (±4.9 mm)		
500~600 (±5.5 mm)		

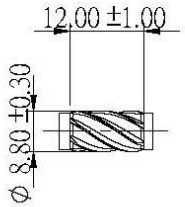

Shank cutter

The thread lengths can be manufactured to customer specific within lg min and lg max.
All dimensions in mm.

ABC-Wood Construction Screws PT-1	Annex 5.19
Screws with d = 12 mm	

Head Types for d=6.0 mm

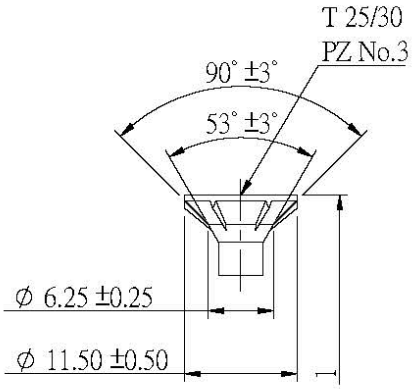

Countersunk head with cutter ribs - design with and without raise

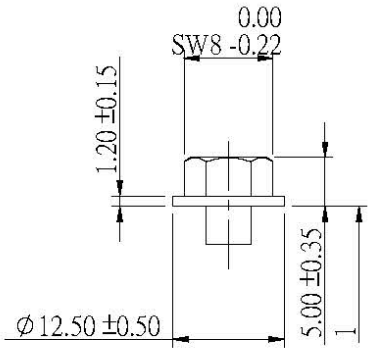

Hex Washer Head

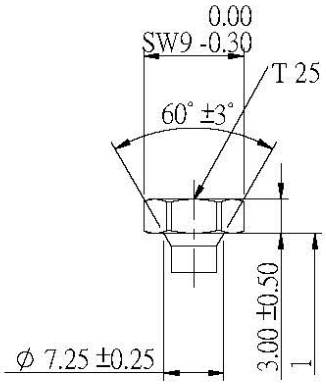

Hexagonal T-Star Head

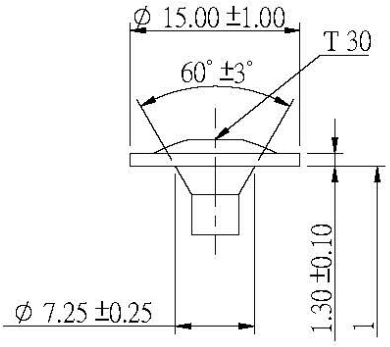

Washer Head

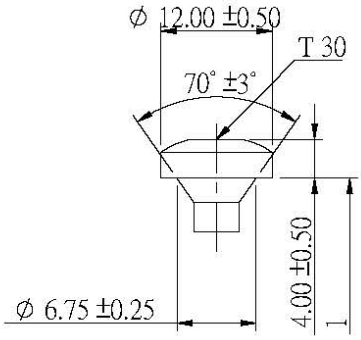

Pan Head

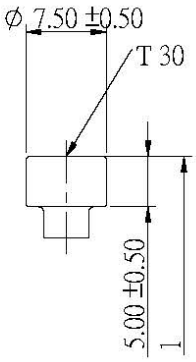

Cylinder Head

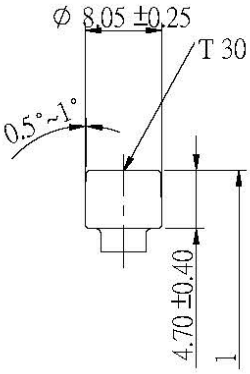

Wide Cylinder Head

ABC- Wood Construction Screws FT-1, ABC- Wood Construction Screws FT-2, ABC- Wood Construction Screws FT-3	Annex 5.20
Screws with d = 6 mm	

Thread Types d=6.0 mm

ABC-Wood Construction Screws FT-1

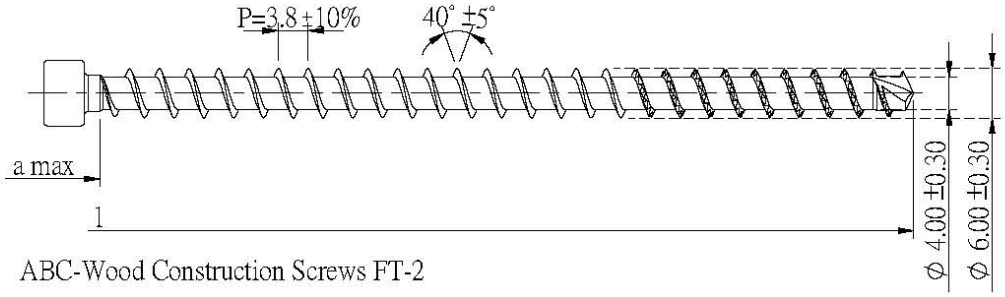

ABC-Wood Construction Screws FT-2

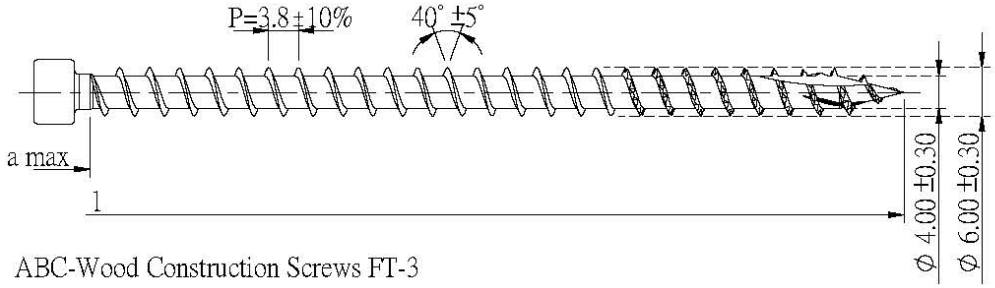

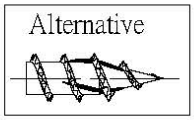

ABC-Wood Construction Screws FT-3

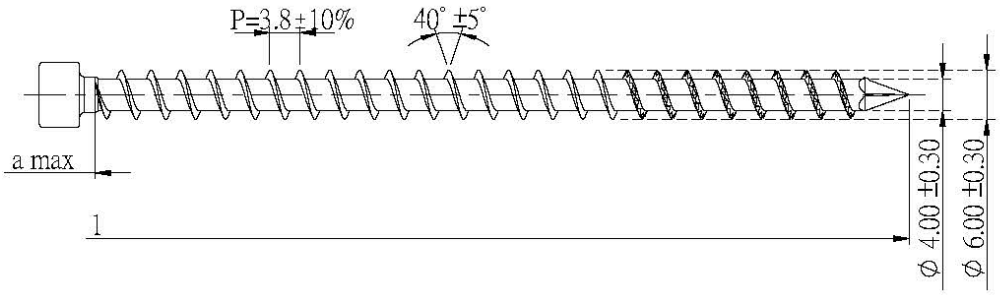

Lengths for d = 6.0 mm

Countersunk-and Cylinder head, Washer, Hexagonal and Hex washer head

l	a max
100~120 (±2.7mm)	max.12 mm
120~180 (±3.2mm)	max.12 mm
180~250 (±3.6mm)	max.12 mm
250~300 (±4.1mm)	max.12 mm

All dimensions in mm.

ABC- Wood Construction Screws FT-1, ABC- Wood Construction Screws FT-2, ABC- Wood Construction Screws FT-3	Annex 5.21
Screws with d = 6 mm	

Head Types for d=8.0 mm

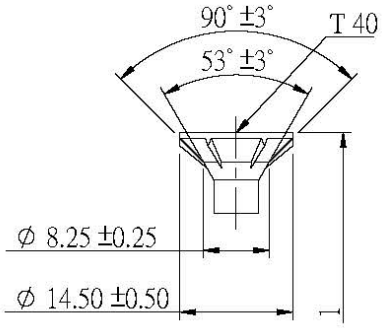

Countersunk head with cutter ribs - design with and without raise

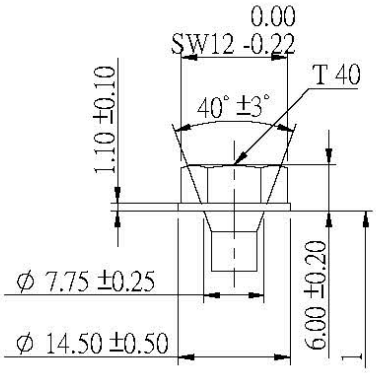

Hex Washer T-Star Head

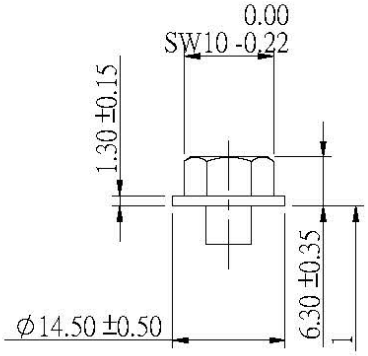

Hex Washer Head

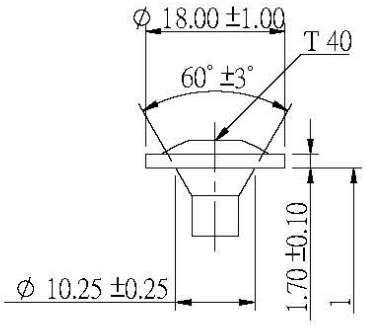

Small Washer Head

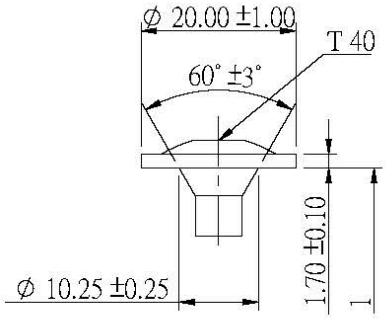

Medium Washer Head

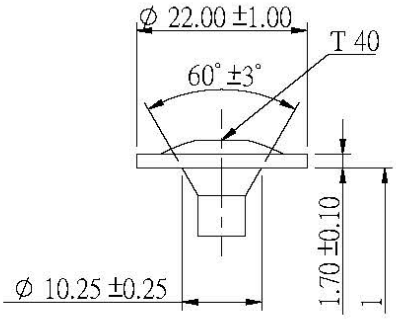

Large Washer Head

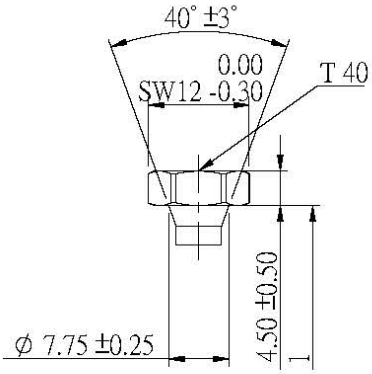

Hexagonal T-Star Head

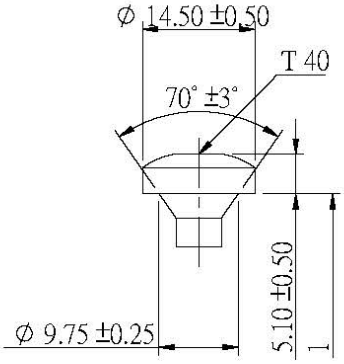

Pan Head

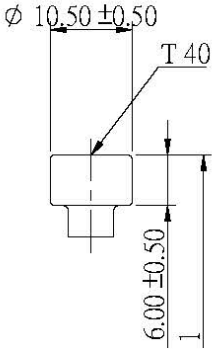

Cylinder Head

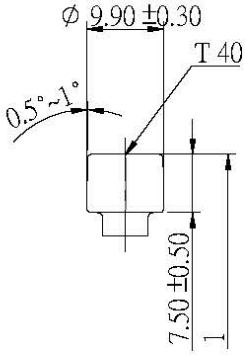

Long Cylinder Head

ABC- Wood Construction Screws FT-1, ABC- Wood Construction Screws FT-2, ABC- Wood Construction Screws FT-3	Annex 5.22
Screws with d = 8 mm	

Thread Types d=8.0 mm

ABC-Wood Construction Screws FT-1

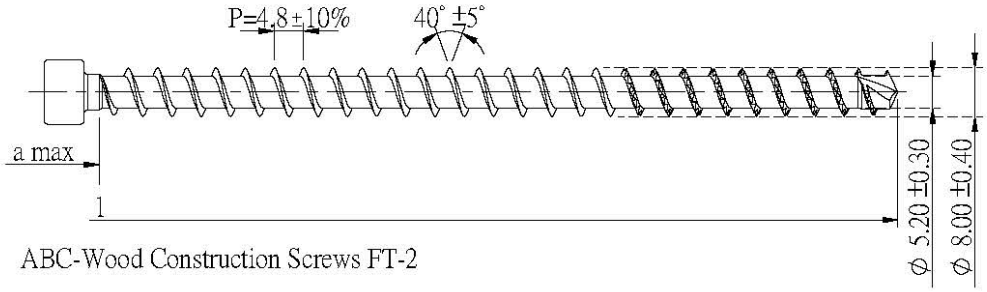

ABC-Wood Construction Screws FT-2

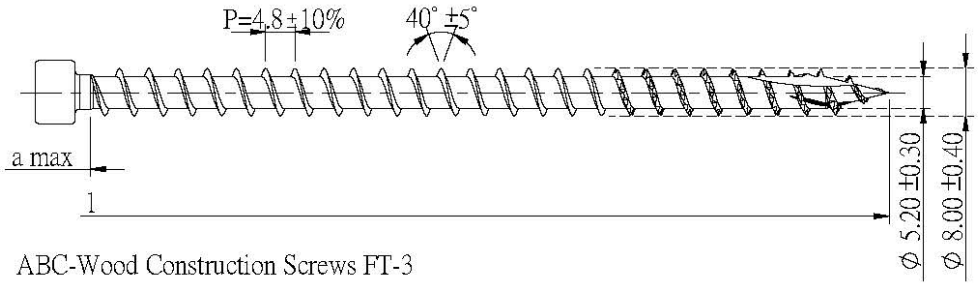

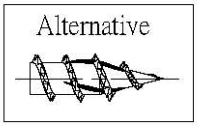

ABC-Wood Construction Screws FT-3

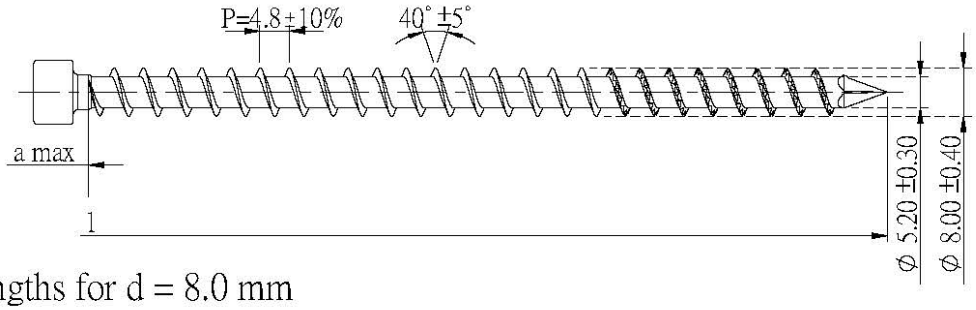

Lengths for d = 8.0 mm

Countersunk-and Cylinder head, Washer, Hexagonal and Hex washer head

l	a max
100~120 (±2.7mm)	max.19 mm
120~180 (±3.2mm)	max.19 mm
180~250 (±3.6mm)	max.19 mm
250~315 (±4.1mm)	max.19 mm
315~400 (±4.5mm)	max.19 mm
400~500 (±4.9mm)	max.19 mm

All dimensions in mm.

ABC- Wood Construction Screws FT-1, ABC- Wood Construction Screws FT-2, ABC- Wood Construction Screws FT-3	Annex 5.23
Screws with d = 8 mm	

Head Types for d=10.0 mm

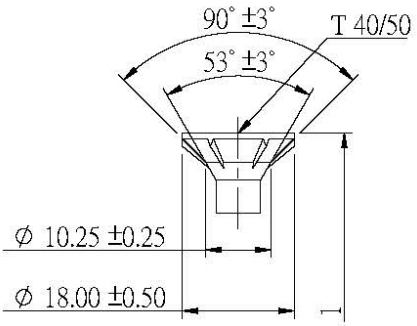

Countersunk head with cutter ribs - design with and without raise

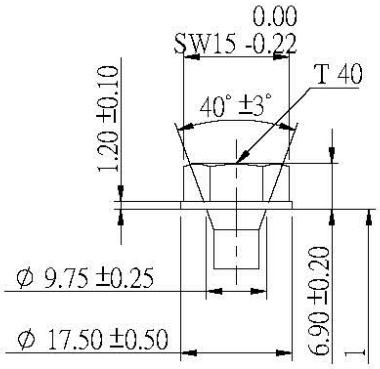

Hex Washer T-Star Head

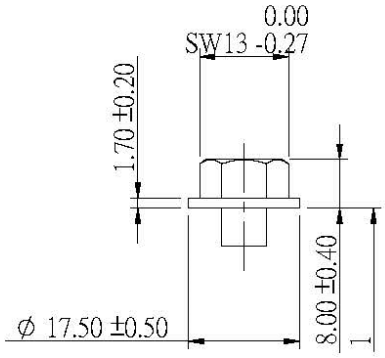

Hex Washer Head

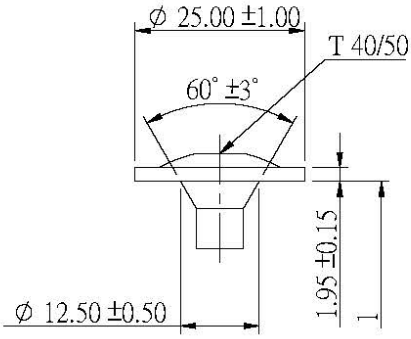

Washer Head

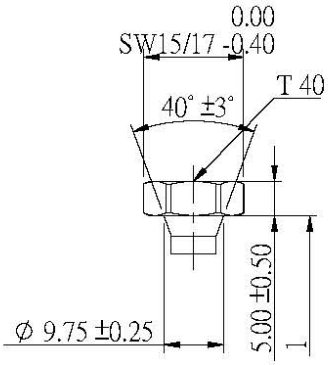

Hexagonal T-Star Head

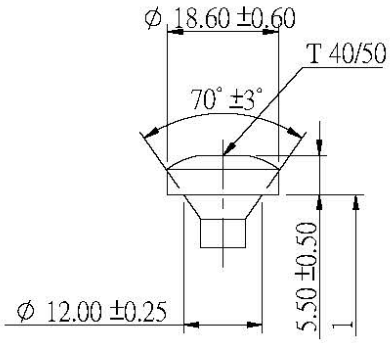

Pan Head

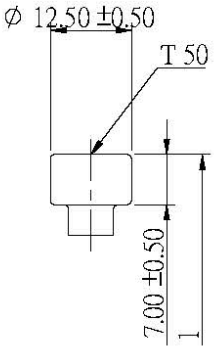

Cylinder Head

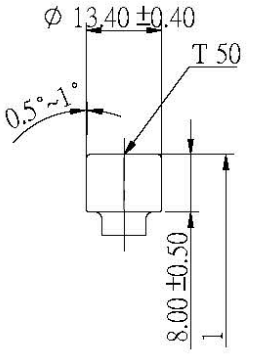

Long Cylinder Head

ABC- Wood Construction Screws FT-1, ABC- Wood Construction Screws FT-2, ABC- Wood Construction Screws FT-3	Annex 5.24
Screws with d = 10 mm	

Thread Types d=10.0 mm

ABC-Wood Construction Screws FT-1

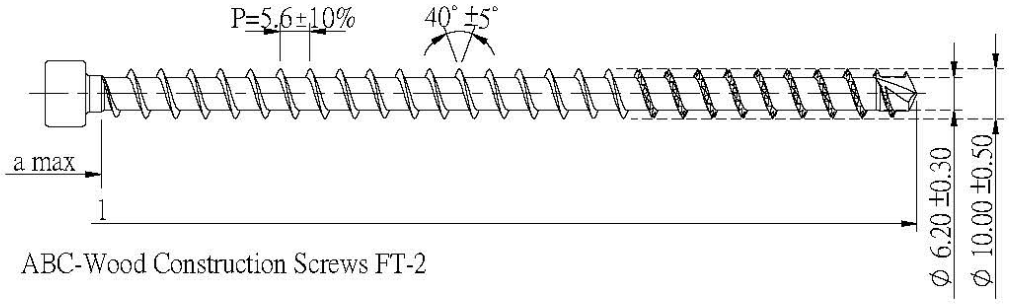

ABC-Wood Construction Screws FT-2

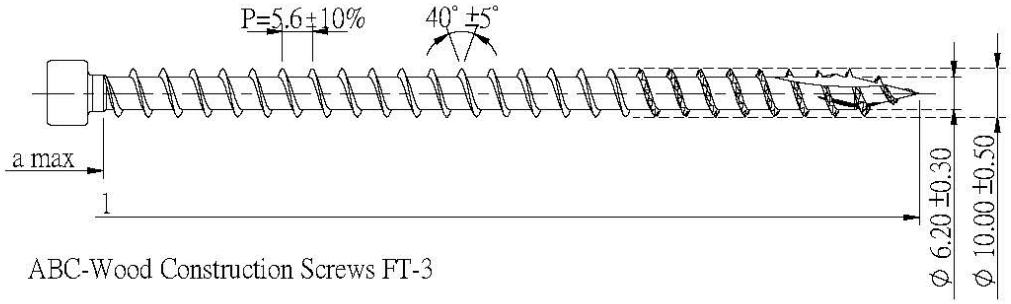

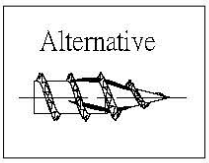

ABC-Wood Construction Screws FT-3

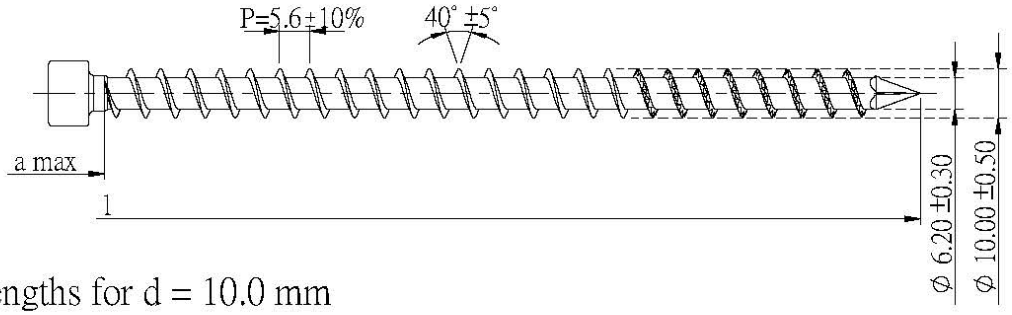

Lengths for d = 10.0 mm

Countersunk-and Cylinder head, Washer, Hexagonal and Hex washer head

l	a max
100~120 (±2.7mm)	max.20 mm
120~180 (±3.2mm)	max.20 mm
180~250 (±3.6mm)	max.20 mm
250~315 (±4.1mm)	max.20 mm
315~400 (±4.5mm)	max.20 mm
400~500 (±4.9mm)	max.20 mm
500~600 (±5.5mm)	max.20 mm

All dimensions in mm.

ABC- Wood Construction Screws FT-1, ABC- Wood Construction Screws FT-2, ABC- Wood Construction Screws FT-3	Annex 5.25
Screws with d = 10 mm	

Head Types for d=12.0 mm

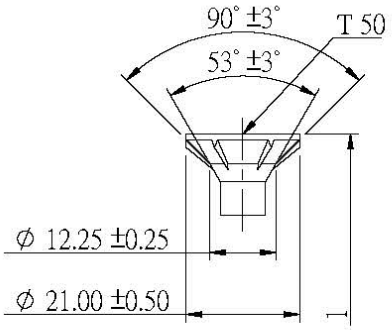

Countersunk head with cutter ribs - design with and without raise

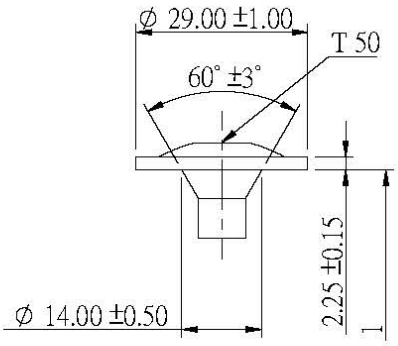

Washer Head

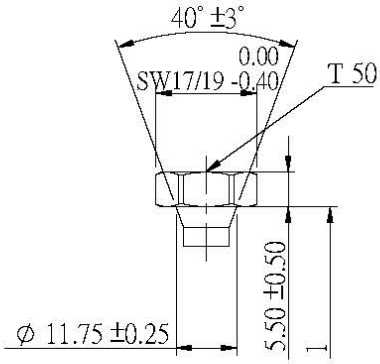

Hexagonal T-Star Head

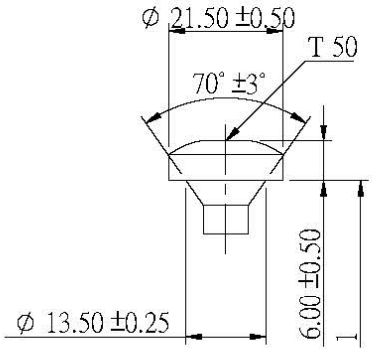

Pan Head

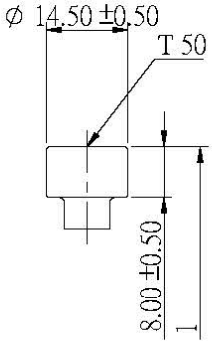

Cylinder Head

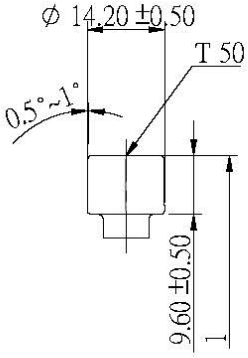

Long Cylinder Head

ABC- Wood Construction Screws FT-1, ABC- Wood Construction Screws FT-2, ABC- Wood Construction Screws FT-3	Annex 5.26
Screws with d = 12 mm	

Thread Types d=12.0 mm

ABC-Wood Construction Screws FT-1

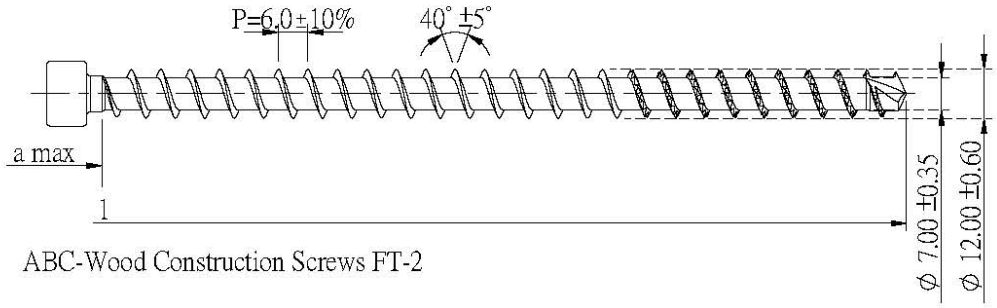

ABC-Wood Construction Screws FT-2

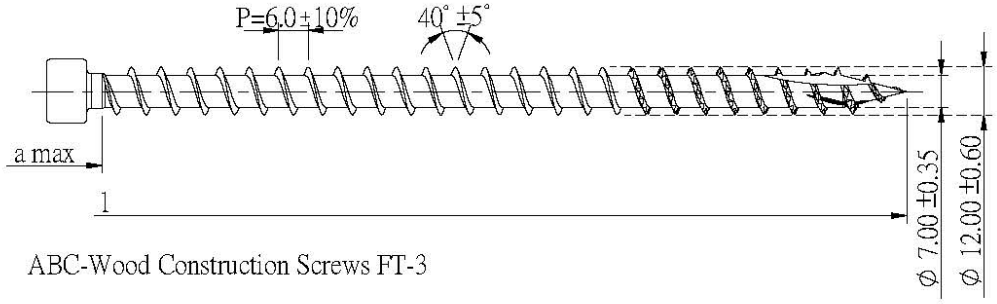

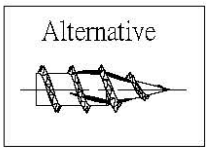

ABC-Wood Construction Screws FT-3

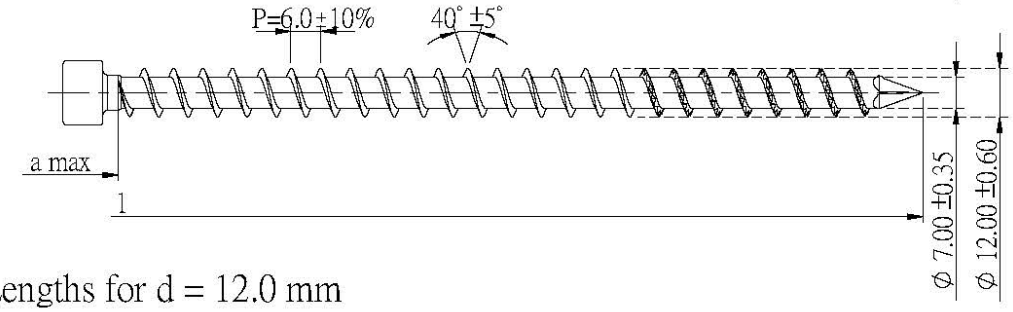

Lengths for d = 12.0 mm

Countersunk-and Cylinder head, Washer, Hexagonal head

l	a max
100~120 (±2.7mm)	max.20.5mm
120~180 (±3.2mm)	max.20.5mm
180~250 (±3.6mm)	max.20.5mm
250~315 (±4.1mm)	max.20.5mm
315~400 (±4.5mm)	max.20.5mm
400~500 (±4.9mm)	max.20.5mm
500~630 (±5.5mm)	max.20.5mm
630~800 (±6.3mm)	max.20.5mm
800~1000 (±7.0mm)	max.20.5mm

All dimensions in mm.

ABC- Wood Construction Screws FT-1, ABC- Wood Construction Screws FT-2, ABC- Wood Construction Screws FT-3	Annex 5.27
Screws with d = 12 mm	

Head Types for d=13.0 mm

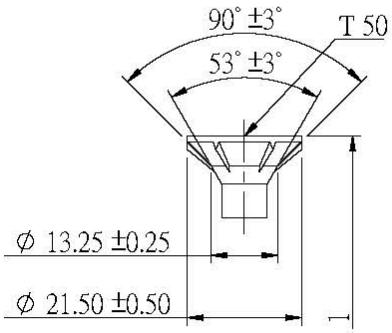

Countersunk head with cutter ribs - design with and without raise

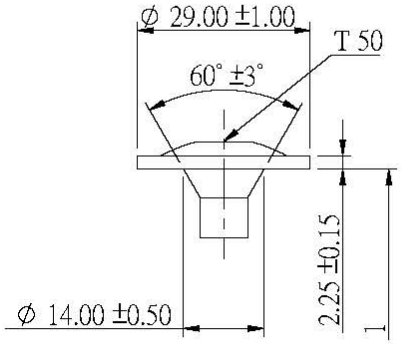

Washer Head

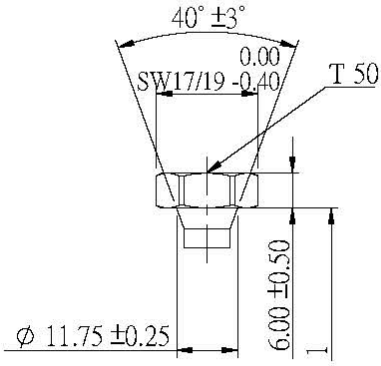

Hexagonal T-Star Head

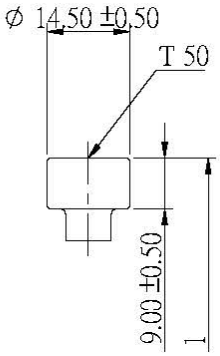

Cylinder Head

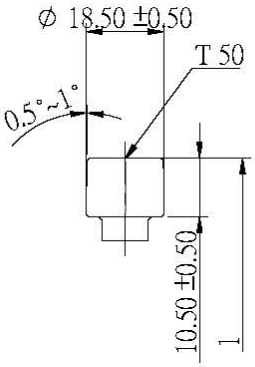

Wide Cylinder Head

ABC- Wood Construction Screws FT-1, ABC- Wood Construction Screws FT-2, ABC- Wood Construction Screws FT-3	Annex 5.28
Screws with d = 13 mm	

Thread Types d=13.0 mm

ABC-Wood Construction Screws FT-1

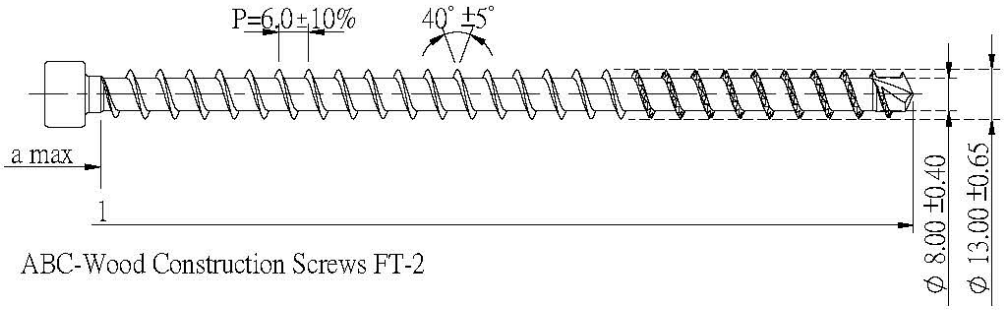

ABC-Wood Construction Screws FT-2

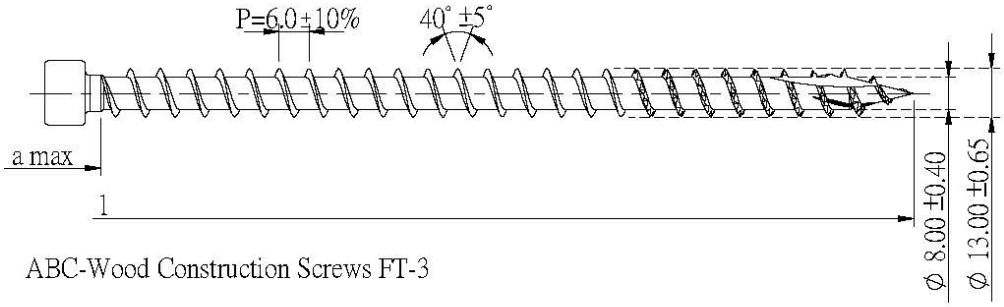

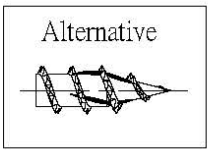

ABC-Wood Construction Screws FT-3

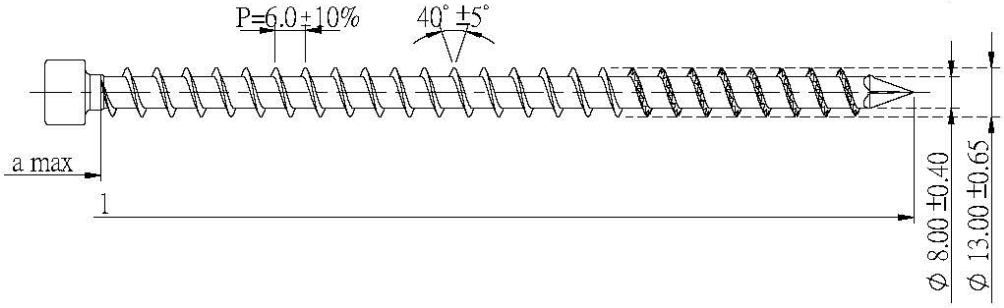

Lengths for d = 13.0 mm

Countersunk-and Cylinder head, Washer, Hexagonal head

l	a max
200~250 (±3.6mm)	max.21.0mm
250~315 (±4.1mm)	max.21.0mm
315~400 (±4.5mm)	max.21.0mm
400~500 (±4.9mm)	max.21.0mm
500~630 (±5.5mm)	max.21.0mm
630~800 (±6.3mm)	max.21.0mm
800~1000 (±7.0mm)	max.21.0mm
1000~1200 (±8.3mm)	max.21.0mm

All dimensions in mm.

ABC- Wood Construction Screws FT-1, ABC- Wood Construction Screws FT-2, ABC- Wood Construction Screws FT-3	Annex 5.29
Screws with d = 13 mm	

Head Types for d=14.0 mm

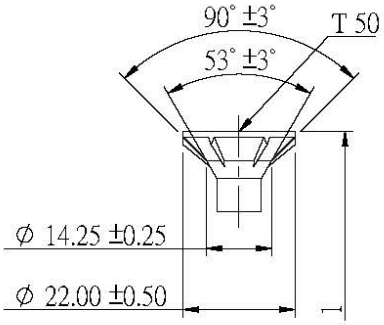

Countersunk head with cutter ribs - design with and without raise

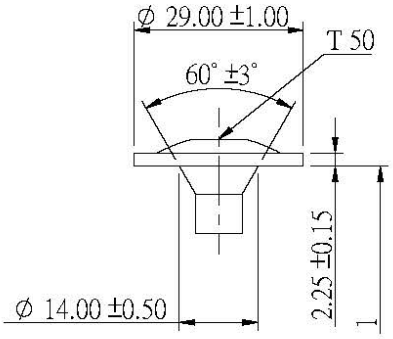

Washer Head

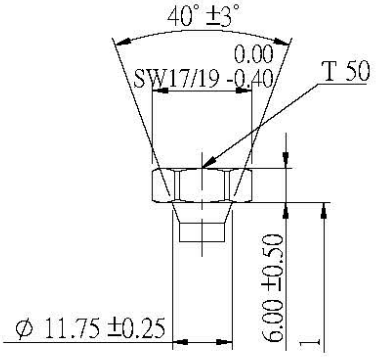

Hexagonal T-Star Head

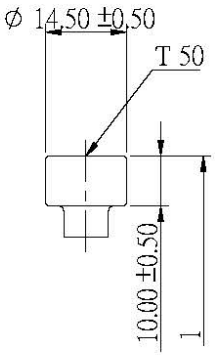

Cylinder Head

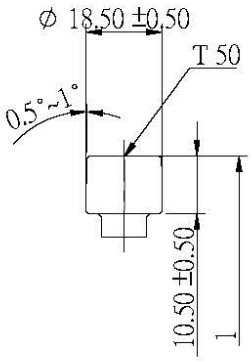

Wide Cylinder Head

ABC- Wood Construction Screws FT-1, ABC- Wood Construction Screws FT-2, ABC- Wood Construction Screws FT-3	Annex 5.30
Screws with d = 14 mm	

Thread Types d=14.0 mm

ABC-Wood Construction Screws FT-1

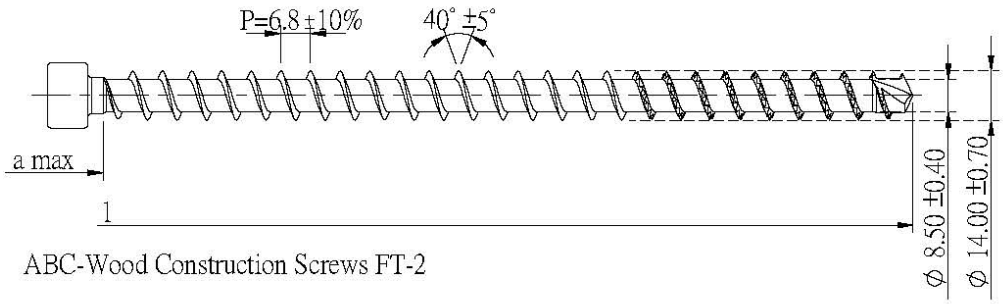

ABC-Wood Construction Screws FT-2

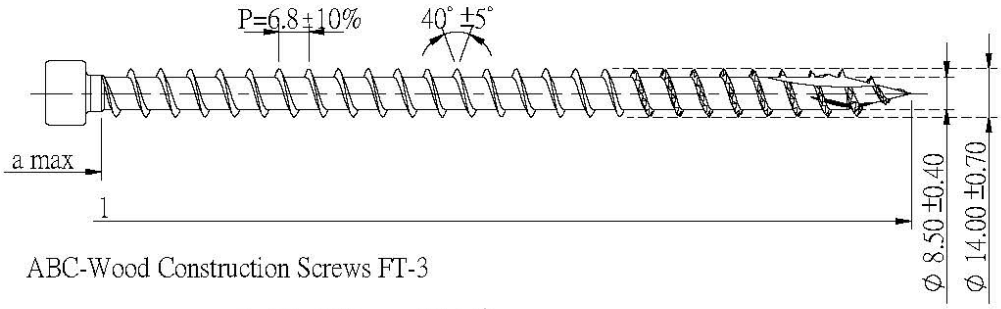

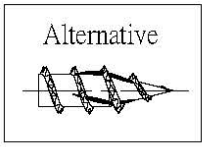

ABC-Wood Construction Screws FT-3

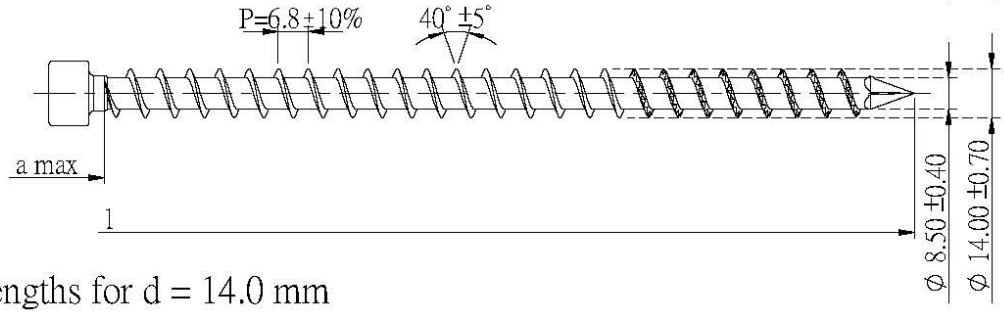

Lengths for d = 14.0 mm

Countersunk-and Cylinder head, Washer, Hexagonal head

Above	a max
200~250 (±3.6mm)	max.22 mm
250~315 (±4.1mm)	max.22 mm
315~400 (±4.5mm)	max.22 mm
400~500 (±4.9mm)	max.22 mm
500~630 (±5.5mm)	max.22 mm
630~800 (±6.3mm)	max.22 mm
800~1000 (±7.0mm)	max.22 mm
1000~1250 (±8.3mm)	max.22 mm
1250~1500 (±9.3mm)	max.22 mm

All dimensions in mm.

ABC- Wood Construction Screws FT-1, ABC- Wood Construction Screws FT-2, ABC- Wood Construction Screws FT-3	Annex 5.31
Screws with d = 14 mm	

Head Marking

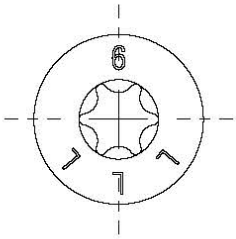

Marking at ABC d=3~14 of designs:
Countersunk Heads, Hexagon T-Star Head
Pan Head, Washer Heads.
Named head type are possible without
marking, too.

ABC-Wood Construction Screws PT-1, ABC- Wood Construction Screws FT-1, ABC- Wood Construction Screws FT-2, ABC- Wood Construction Screws FT-3	Annex 5.32
Head Marking	

Washer

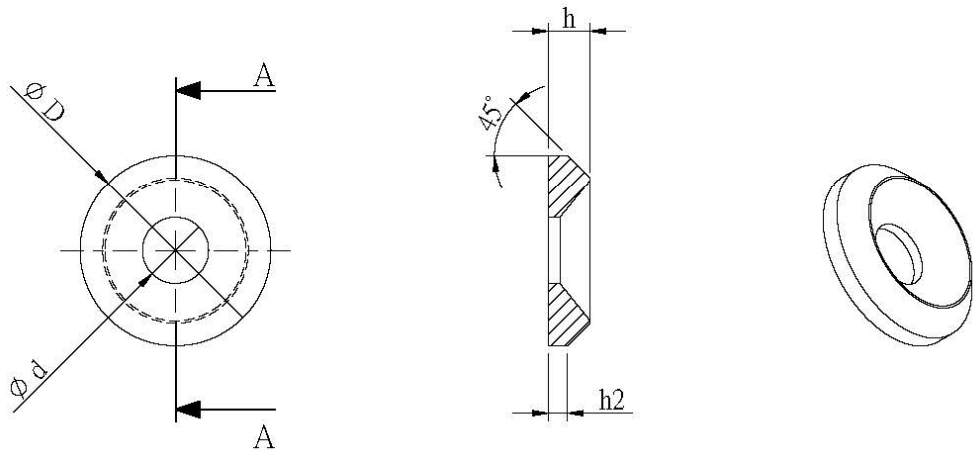

Dimensions carbon steel

Size	D ± 0.3	d ± 0.3	h ± 0.3	h2 ± 0.1
6	19.5	7.5	4.6	1.5
8	24.5	8.5	5.4	2.5
10	30.0	10.8	6.4	2.7
12	37.5	14.0	8.5	3.5

All dimensions in mm.

ABC-Wood Construction Screws PT-1, ABC- Wood Construction Screws FT-1, ABC-Wood Construction Screws FT-2, ABC- Wood Construction Screws FT-3	Annex 5.33
Washer	