Building Code Clause(s) B1

PRODUCER STATEMENT – PS1 – DESIGN

ISSUED BY: PreStressed Timber Limited
(Design Firm)

TO: SPAX Pacific Pty. Ltd.
(Owner/Developer)

TO BE SUPPLIED TO: New Zealand Territorial Authorities
(Building Consent Authority)

IN RESPECT OF: SPAX beam-to-post fixing solution
(Description of Building Work)

AT: Any address
(Address)

Town/City: Various **LOT** ..... **DP** ..... **SO** .....
(Address)

We have been engaged by the owner/developer referred to above to provide:

SPAX beam-to-post fixing solution - 'Timber Construction Application Sheet No.1A' and 'Timber Construction Application Sheet No.1C'

(Extent of Engagement)

services in respect of the requirements of Clause(s) B1 of the Building Code for:

☐ All or ■ Part only (as specified in the attachment to this statement), of the proposed building work.

The design carried out by us has been prepared in accordance with:

☐ Compliance Documents issued by the Ministry of Business, Innovation & Employment ..... or
(verification method/acceptable solution)

■ Alternative solution as per the attached schedule SPAX ETA 12/0114 and DZ AS NZS 1720.1

The proposed building work covered by this producer statement is described on the drawings titled:

Timber Construction Application Sheets and numbered No.1A and No. 1C;
together with the specification, and other documents set out in the schedule attached to this statement.

On behalf of the Design Firm, and subject to:
(i) Site verification of the following design assumptions as per Timber Construction Application Sheet
(ii) All proprietary products meeting their performance specification requirements;

I believe on reasonable grounds that a) the building, if constructed in accordance with the drawings, specifications, and other documents provided or listed in the attached schedule, will comply with the relevant provisions of the Building Code and that b), the persons who have undertaken the design have the necessary competency to do so. I also recommend the following level of construction monitoring/observation:

~~☐ CM1 ☐ CM2 ☐ CM3 ☐ CM4 ☐ CM5 (Engineering Categories) or ■ as per agreement with owner/developer (Architectural)~~

I, Daniel Moroder am: ■ CPEng 1022633 # ☐ Reg Arch ..... #
(Name of Design Professional)

I am a member of: ■ Engineering New Zealand ☐ NZIA and hold the following qualifications: dott. ing. PhD CPEng
The Design Firm issuing this statement holds a current policy of Professional Indemnity Insurance no less than $200,000*.
The Design Firm is a member of ACENZ: ☐

SIGNED BY Daniel Moroder (Signature) Daniel Moroder
(Name of Design Professional)

ON BEHALF OF PreStressed Timber Limited Date 11/05/2021
(Design Firm)

Note: This statement shall only be relied upon by the Building Consent Authority named above. Liability under this statement accrues to the Design Firm only. The total maximum amount of damages payable arising from this statement and all other statements provided to the Building Consent Authority in relation to this building work, whether in contract, tort or otherwise (including negligence), is limited to the sum of $200,000.*

This form is to accompany **Form 2 of the Building (Forms) Regulations 2004** for the application of a Building Consent.

THIS FORM AND ITS CONDITIONS ARE COPYRIGHT TO ACENZ, ENGINEERING NEW ZEALAND AND NZIA

Timber Construction Application Sheet No. 1A

Beam to Post - continuous beam

Timber Construction

SPAX beam-to-post fixing solution

- Cost-effective and easy to install
- Invisible connection - no brackets required
- High load capacity to resist wind uplift
- Long lasting durability

Item	Description	For Beam Size	Drive Bit	SPAX No.	EAN No.
	SPAX 10x180 Delta-Seal W/H	90 x 90	T50	0251641001800	4003530242694
	SPAX 10x220 Delta-Seal W/H	140 x 90	T50	0251641002200	4003530242717
	SPAX 10x280 Delta-Seal W/H	190 x 90	T50	0251641002800	4003530242748
	SPAX 10x300 Delta-Seal W/H	240 x 90	T50	0251641003000	4003530242755
	SPAX 6x180 Delta-Seal Cyl/H. F/T	90 x 90	T30	1211640601805	4003530184802
	SPAX 8x240 Delta-Seal Cyl/H. F/T	140 x 90	T40	1221640802405	4003530241147
	SPAX 8x280 Delta-Seal Cyl/H. F/T	190 x 90	T40	1221640802805	4003530241161
	SPAX 8x350 Delta-Seal Cyl/H. F/T	240 x 90	T40	1221640803505	4003530241185
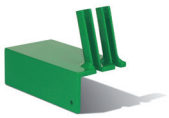					
	SPAX Post to Beam Screw Guide 15°			3000002000015	0794712213550
	SPAX T-STAR *plus* T30 25mm			5000009182309	4003530239670
	SPAX T-STAR *plus* T40 25mm			5000009182409	4003530239687
	SPAX T-STAR T50 35mm			5077701515035	4003530161582

SPAX Pacific Pty Ltd www.spaxpacific.com
Australia: Ph 07 4056 2009 info@spaxpacific.com
New Zealand: Ph 09 570 7447 info@spaxpacific.co.nz

MADE IN Germany

Beam to Post - continuous beam

Installation instructions

1. Mark the washer head screw location on the top of the beam to coincide with the centre of the post. Drive the washer head screw vertically through beam using a rotary drill-driver only. When two beams join over the post, use a 50mm square washer under the head of the screw.
2. Clamp the beam-to-post drilling template into position on the top of the beam as shown below.
3. Install two cylinder head screws along the template guides to achieve the correct angle. Move the template to the opposite side of the post and repeat for the other two screws. No need to pre-drill in pine but pre-drilling to the full depth of the screw is required in hardwood using the drill diameters as shown below. Note: Do not use an impact driver to install the screws.
4. The washer head screw may be removed if desired after the cylinder head screws are installed.

Positioning of screw guide

Draw a line extending the edges of the post to the top of the beam. Then position the end of the drilling template as shown in the diagram and table below, depending on the size of the beam, e.g. for a 90 x 90 beam, the edge of the template is placed on the extension line in position “a”.

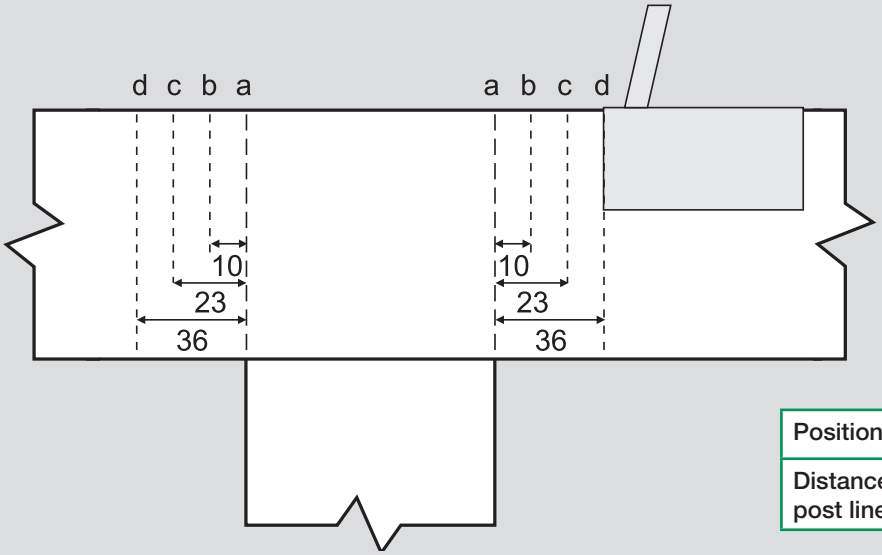

Drill bit diameters

		Screw diam. d_1 (mm)	
		6	8
Drill diam.	Softwood	4.0	5.0
	Hardwood	4.0	6.0

	Beam			
	90 x 90	140 x 90	190 x 90	240 x 90
Position	a	b	c	d
Distance from post line	0mm	10mm	23mm	36mm

Characteristic Uplift Load Data

		Beam			
		90 x 90	140 x 90	190 x 90	240 x 90
Post 90 x 90	WH P/T	10 x 180	10 x 220	10 x 280	10 x 300
	Full Thread	6 x 180	8 x 240	8 x 280	8 x 350
	$F_{ax,\alpha,Rk}$	**21.9 kN**	**31.9 kN**	**28.1 kN**	**34.3 kN**
	a (mm)	14	24	37	50
	b (mm)	10	14	14	14

- Design criteria is according to SPAX ETA 12/0114
- $F_{ax,\alpha,Rk}$ is the characteristic load of four cylinder head full thread screws in radiata pine (characteristic density of 370 kg/m^3)
- The appropriate modification factors must be applied to determine design load
- All dimensions are in mm
- PS1 Producer Statement available

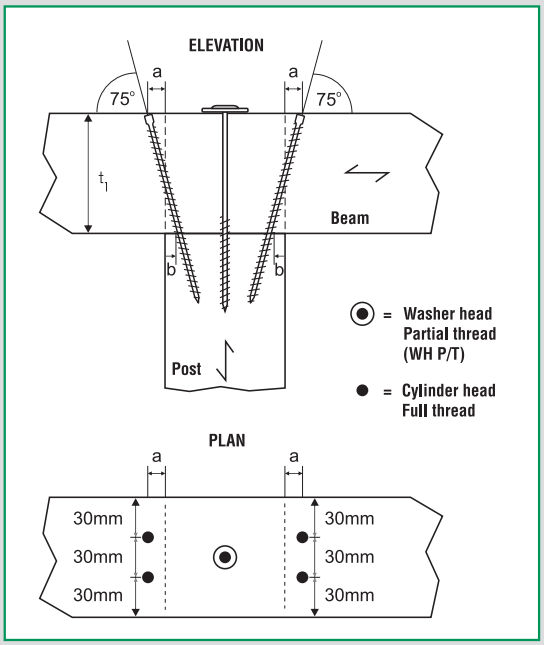

SPAX Pacific Pty Ltd www.spaxpacific.com
Australia: Ph 07 4056 2009 info@spaxpacific.com
New Zealand: Ph 09 570 7447 info@spaxpacific.co.nz

MADE IN Germany

Timber Construction Application Sheet No. 1C

Beam to Post - Beam End

Timber Construction

SPAX beam-to-post fixing solution

- Cost-effective and easy to install
- Invisible connection - no brackets required
- High load capacity to resist wind uplift
- Long lasting durability

Item	Description	For Beam Size	Drive Bit	SPAX No.	EAN No.
	SPAX 10 x 180 Delta-Seal W/H	90 x 90	T50	0251641001800	4003530242694
	SPAX 10 x 220 Delta-Seal W/H	140 x 90	T50	0251641002200	4003530242717
	SPAX 10 x 280 Delta-Seal W/H	190 x 90	T50	0251641002800	4003530242748
	SPAX 8 x 200 Delta-Seal Cyl/H. F/T	90 x 90	T40	1221640802005	4003530241123
	SPAX 8 x 240 Delta-Seal Cyl/H. F/T	140 x 90	T40	1221640802405	4003530241147
	SPAX 8 x 280 Delta-Seal Cyl/H. F/T	190 x 90	T40	1221640802805	4003530241161
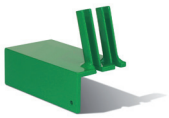					
	SPAX Post to Beam Screw Guide 15°			3000002000015	0794712213550
	SPAX T-STAR *plus* T40 25mm			5000009182409	4003530239687
	SPAX T-STAR T50 35mm			5077701515035	4003530161582

SPAX Pacific Pty Ltd www.spaxpacific.com
Australia: Ph 07 4056 2009 info@spaxpacific.com
New Zealand: Ph 09 570 7447 info@spaxpacific.co.nz

MADE IN GERMANY

Beam to Post - Beam End

Installation instructions

1. Mark the washer head screw location on the top of the beam to coincide with the centre of the post. Drive washer head screw vertically through beam using a rotary drill-driver only.
2. Clamp the beam-to-post drilling template into position on the top of the beam as shown below.
3. Install two cylinder head screws along the template guides to achieve the correct angle. No need to pre-drill in pine but pre-drilling to the full depth of the screw is required in hardwood using the drill diameters as shown below. Note: Use a rotary drill-driver only to install the screws.
4. The washer head screw must then be removed before the third cylinder head screw is installed.
5. Install the cylinder head screw closest to the end according to the measurements below.

Positioning of screw guide

Draw a line extending the edges of the post to the top of the beam. Then position the end of the drilling template as shown in the diagram and table below, depending on the size of the beam, e.g. for a 90 x 90 beam, the edge of the template is placed on the extension line in position “a”.

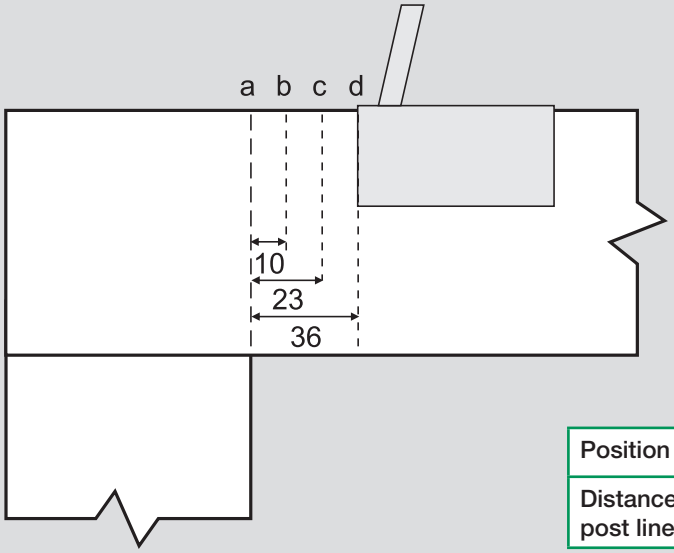

Drill bit diameters

		Screw diam. d_1 (mm)	
		6	8
Drill diam.	Softwood	4.0	5.0
	Hardwood	4.0	6.0

	Beam		
	90 x 90	140 x 90	190 x 90
Position	a	b	c
Distance from post line	0mm	10mm	23mm

Characteristic Uplift Load Data

		Beam		
		90 x 90	140 x 90	190 x 90
Post 90 x 90	WH P/T	10 x 180	10 x 220	10 x 280
	Full Thread	8 x 200	8 x 240	8 x 280
	$F_{ax,\alpha,Rk}$	**21.2 kN**	**21.6 kN**	**18.9 kN**
	e (mm)	14	24	37
	f (mm)	10	14	14
	g (mm)	28	20	10
	h (mm)	52	58	62

- Design criteria is according to SPAX ETA 12/0114
- $F_{ax,\alpha,Rk}$ is the characteristic load of four cylinder head full thread screws in radiata pine (characteristic density of 370 kg/m^3)
- The appropriate modification factors must be applied to determine design load
- PS1 Producer Statement available

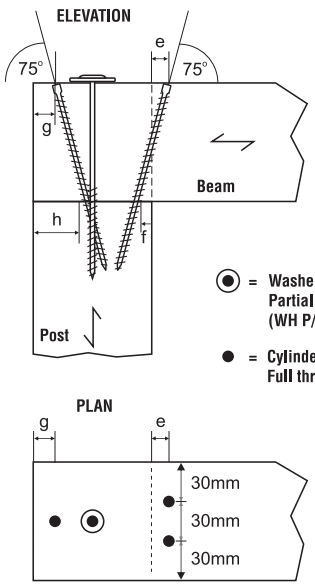

SPAX Pacific Pty Ltd www.spaxpacific.com
Australia: Ph 07 4056 2009 info@spaxpacific.com
New Zealand: Ph 09 570 7447 info@spaxpacific.co.nz

MADE IN GERMANY